AM/FM STEREO RECEIVER

SX-1980

SERVICE MANUAL

PIONEER

MODEL SX-1980 COMES IN FIVE VERSIONS DISTINGUISHED AS FOLLOWS:

Type	Voltage	Remarks
KU	120V only	U.S.A. model
KC	120V only	Canada model
HG	220V and 240V (Switchable)	Europe or Oceania model
S	110V, 120V, 220V and 240V (Switchable)	General export model
S/G	110V, 120V, 220V and 240V (Switchable)	U.S. Military model

This service manual is applicable to the KU type. For servicing of the HG, S, S/G, KC types please refer to the additional service manual.

CONTENTS

1. SPECIFICATIONS 3
2. CONNECTION DIAGRAM 5
3. FRONT PANEL FACILITIES 7
4. BLOCK DIAGRAM
   - 4.1 Tuner Section 10
   - 4.2 Power Supply Section 10
   - 4.3 AF Amplifier Section 11
5. LEVEL DIAGRAM 12
6. CIRCUIT DESCRIPTIONS
   - 6.1 Tuner Section 13
   - 6.2 Preamplifier Section 20
   - 6.3 Power Amplifier Section 21
   - 6.4 Power Supply Circuit 24
7. DISASSEMBLY 25
8. PARTS LOCATION
   - 8.1 Front Panel View 27
   - 8.2 Front View with Panel Removed 28
   - 8.3 Top View 29
   - 8.4 Bottom View 30
   - 8.5 Rear Panel View 31
9. DIAL CORD STRINGING 32

10. ADJUSTMENTS
10.1 Power Amplifiers 33
10.2 FM Tuner 34
10.3 APC Adjustment 36
10.4 AM Tuner 37
11. EXPLODED VIEW 38
12. SCHEMATIC DIAGRAMS, P.C. BOARD PATTERNS AND PARTS LIST
12.1 Miscellanea 48
12.2 Schematic Diagram 51
12.3 Tuner Assembly (AWE-093) 53
12.4 Slide Switch Assembly (AWS-125) 60
12.5 Cartridge Load Assembly (GWS-130) 61
12.6 APC Assembly (AWX-124) 62
12.7 EQ Amplifier Assembly (AWF-030) 66
12.8 Function Selector Assembly (GWS-129) 70
12.9 APC Control/MIC Assembly (GWM-104) 74
12.10 Flat Amplifier Assembly (AWG-058) 76
12.11 Tone Control Assembly (AWG-059) 80
12.12 Filter Assembly (AWM-119) 84
12.13 Rectifier L Assembly (GWR-106) 87
12.14 Power Amplifier L Assembly (GWH-109) 88
12.15 Power Amplifier R Assembly (GWH-110) 92
12.16 Meter Amplifier Assembly (AWM-122) 96
12.17 Rectifier R Assembly (GWR-107) 99
12.18 Power Supply Assembly (AWR-154) 100
13. PACKING 104
Additional Service Manual (for HG, S and S/G type) 105
Additional Service Manual (for KC type) 122

1. SPECIFICATIONS

Semiconductors

FETs 12
ICs 11
Transistors 130
Diodes 84

Power Amplifier Section

Continuous power output of 270 watts* per channel min., at 8 ohms from 20 Hertz to 20,000 Hertz with no more than 0.03% total harmonic distortion.

Total Harmonic Distortion (20 Hertz to 20,000 Hertz)
  Continuous Rated Power Output . .No more than 0.03%
  135 watts per channel power
    output, 8 ohms . . . . . No more than 0.02%
  1 watt per channel power
    output, 8 ohms . . . . . No more than 0.02%
Intermodulation Distortion (50 Hertz: 7,000 Hertz=4:1)
  Continuous Rated Power Output . .No more than 0.03%
  135 watts per channel power
    output, 8 ohms . . . . . No more than 0.01%
  1 watt per channel power
    output, 8 ohms . . . . . No more than 0.006%
Frequency Response . . . . 5 Hertz to 100,000 Hertz $^{+0}_{-1}$ dB
Input Sensitivity/Impedance (POWER AMP IN)
  . . . . . 2V/50 kilohms
Output
  Speaker . . . . . A, B, C, A+B, B+C, A+C
Damping Factor
  (20 Hertz to 20,000 Hertz, 8 ohms) 40
Hum and Noise (IHF, short-circuited, A Network) . . 120dB

Preamplifier Section

Input Sensitivity/Impedance
  PHONO 1 . . . . . 2.5mV/10, 50, 100 kilohms
  Cartridge load (capacitance) . . . 100, 200, 300, 400pF
  PHONO 2 . . . . . 2.5mV/50 kilohms
  MIC . . . . . 7.5mV/50 kilohms
  AUX . . . . . 150mV/50 kilohms
  TAPE PLAY 1 . . . . . 150mV/50 kilohms
  TAPE PLAY 2 . . . . . 150mV/50 kilohms
PHONO Overload Level (1kHz; T.H.D. 0.03%)
  PHONO 1, 2 . . . . . 300mV
Output Level/Impedance
  TAPE REC 1 . . . . . 150mV
  TAPE REC 2 . . . . . 150mV
  PRE OUT . . . . . 2V/1 kilohms
Total Harmonic Distortion
  (20Hz to 20,000Hz, 2V output) . . .No more than 0.01%
Frequency Response
  PHONO(RIAA Equalization) . 20Hz to 20,000Hz ±0.2dB
  AUX, TAPE PLAY . . . . . 5Hz to 80,000Hz $^{+0}_{-1}$ dB
Tone Control
  BASS . . . . Main control . . . . . ±10dB (100Hz)
    Sub control . . . . . ± 5dB (50Hz)
  TREBLE . . Main control . . . . . ±10dB (10kHz)
    Sub control . . . . . ± 5dB (20kHz)
Filter
  LOW 15Hz (12dB/oct.)
  HIGH 8kHz (12dB/oct.)
Loudness Contour (Volume control set at −40dB position)
  . . . . . +6dB (100Hz), +3dB (10kHz)
Hum and Noise (IHF, short-circuited, A network)
  PHONO (PHONO INTERFERENCE FILTER
    switch OFF) 87dB
  AUX, TAPE PLAY 100dB
Muting . . . . . −20dB

FM Section

Usable Sensitivity
  MONO 8.7dBf (1.5μV)
50dB Quieting Sensitivity
  MONO 11.5dBf (2.2μV)
  STEREO 36.0dBf (34μV)
Signal-to-Noise Ratio
  (at 75dBf) . . . STEREO 75dB
  (at 65dBf) . . . MONO 83dB
    STEREO 74dB
Distortion (at 65dBf)
  100Hz MONO/STEREO 0.05%/0.1%
  1kHz MONO/STEREO 0.07%/0.1%
  6kHz MONO/STEREO 0.2%/0.2%
Frequency Response . . . . . 30Hz to 15,000Hz $^{+0}_{-0.5}$ dB
Capture Ratio 1.0dB
Alternate Channel Selectivity 80dB
Spurious Response Ratio 120dB
Image Response Ratio 120dB
IF Response Ratio 120dB
AM Suppression Ratio 60dB
Muting Threshold 19.2dBf (5μV)
Stereo Separation . . . 50dB (1kHz), 40dB (30Hz~15kHz)
Subcarrier Product Ratio 65dB
SCA Rejection Ratio 65dB
Antenna Input . . . . . 300 ohms balanced
  75 ohms unbalanced

AM Section

Sensitivity (IHF, Ferrite antenna) 300μV/m
(IHF, Ext. antenna) 15μV
Selectivity 26dB
Signal-to-Noise Ratio 55dB
Image Response Ratio 70dB
IF Response Ratio 70dB
Antenna . . . . . Built-in Ferrite Loopstick Antenna

Miscellaneous

Power Requirements 120V 60Hz
Power Consumption . . . . . 650W (UL), 1,400VA (CSA)
1400W (max.)
Dimensions . . . . . 560(W) x 211(H) x 497(D)mm
22-1/16(W) x 8-5/16(H) x 19-9/16(D)in
Weight Without Package 35.4kg (78lb)
With Package 40.3kg (88lb 14oz)

Furnished Parts

FM T-type Antenna 1
Operating Instructions 1
Hex. Wrench 1

**Measured pursuant to Federal Trade Commission's Trade Regulation rule on Power Output Claims for Amplifiers.*

NOTE:
Specifications and the design subject to possible modification without notice due to improvements.

HEX WRENCH

The accessory hexagonal wrench is provided for removing the TUNING knob and VOLUME knob or tightening their set screws should they become loose.
If required, loosen the set screw by inserting the wrench into the hole on the side of the knob and turning the wrench counter-clockwise. Be particularly careful not to scratch the front panel when employing the wrench.

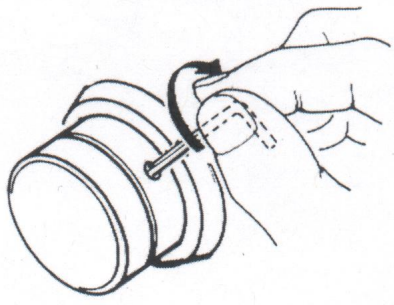

2. CONNECTION DIAGRAM

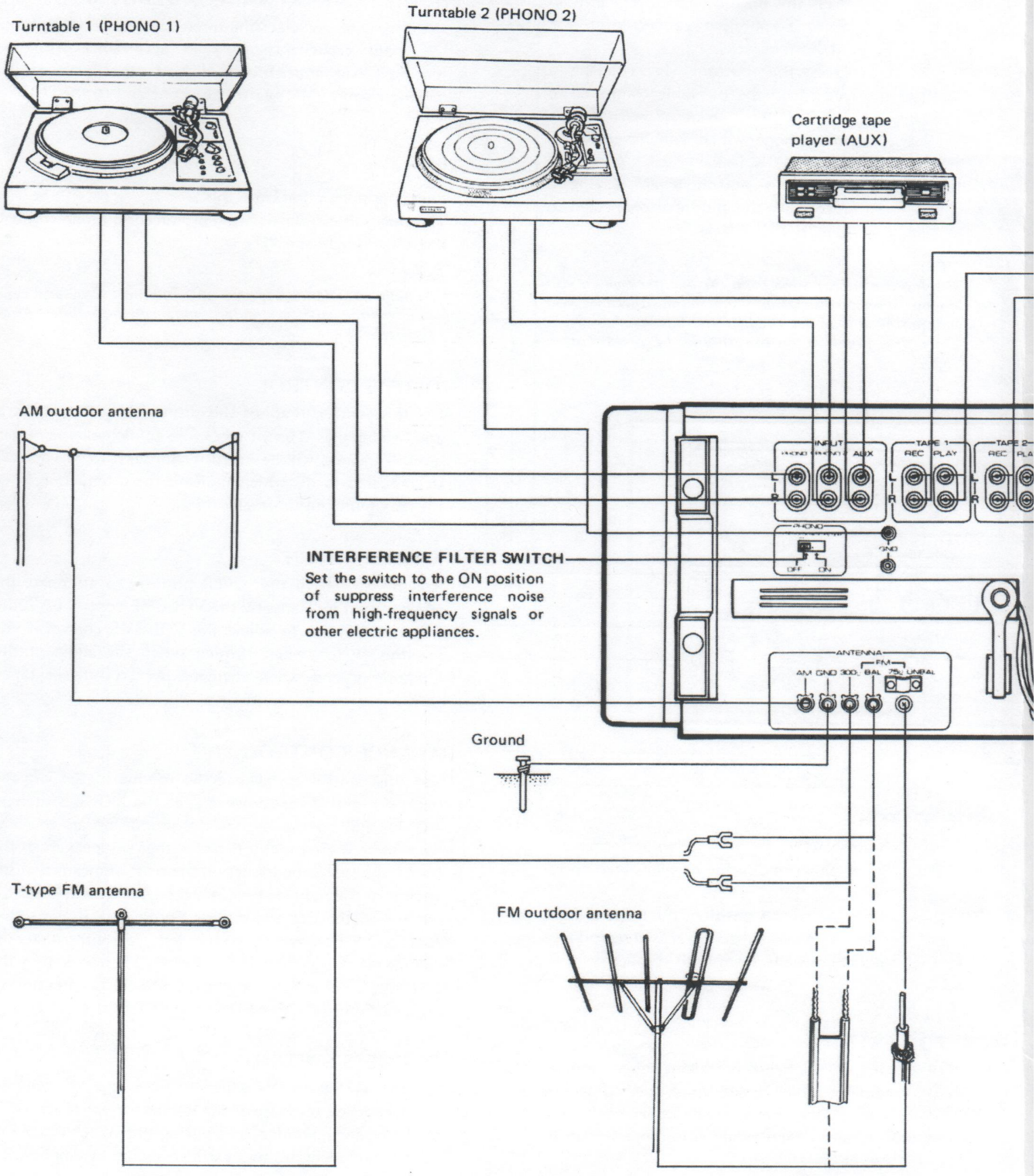
Turntable 1 (PHONO 1)
Turntable 2 (PHONO 2)
Cartridge tape player (AUX)
AM outdoor antenna
INTERFERENCE FILTER SWITCH
Set the switch to the ON position of suppress interference noise from high-frequency signals or other electric appliances.
Ground
T-type FM antenna
FM outdoor antenna

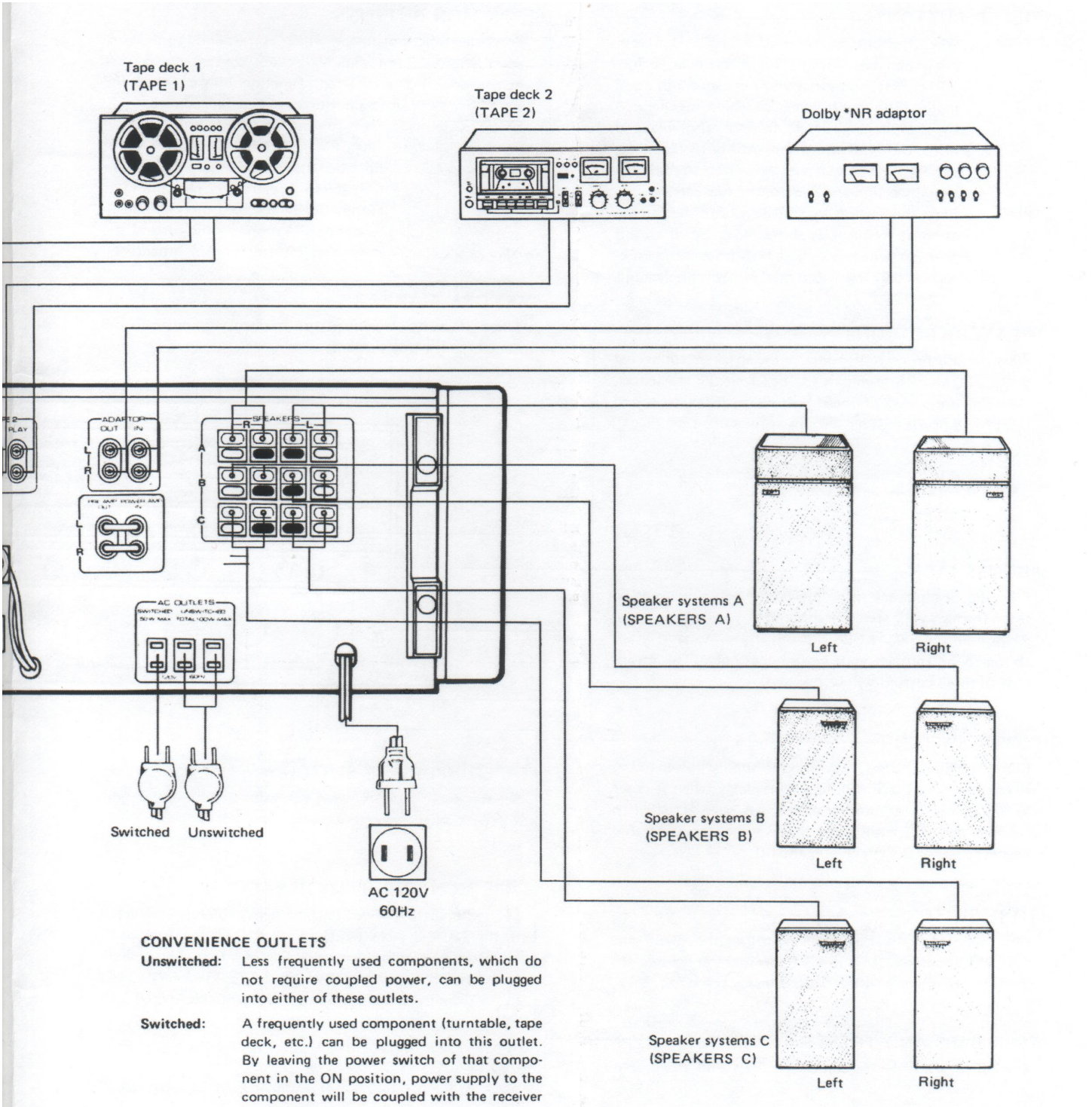

CONVENIENCE OUTLETS

Unswitched: Less frequently used components, which do not require coupled power, can be plugged into either of these outlets.

Switched: A frequently used component (turntable, tape deck, etc.) can be plugged into this outlet. By leaving the power switch of that component in the ON position, power supply to the component will be coupled with the receiver switch operation.

* The word "Dolby" is a trademark of Dolby Laboratories Inc.

3. FRONT PANEL FACILITIES

FILTER BUTTONS

15Hz . . When this button is pressed, a 12dB/oct attenuation can be provided for frequencies below 15Hz. This means that you can cancel out noise in the ultra-low frequencies which is generated by low-pitched rumble from a turntable and other forms of distortion. Although this noise cannot be heard, it can generate intermodulation distortion and damage the speakers.

8kHz . . Press this button to provide a 12dB/oct attenuation at frequencies above 8kHz. Set it to this position when you find high-frequency noise, such as that from scratched records, unpleasant.

SPEAKERS BUTTONS

Press the button corresponding to the speakers connected to the SPEAKERS terminals (A, B, C) on the rear panel. You can press two of these buttons to listen to sound from two pairs of speaker systems at the same time.

NOTE:
No sound will be heard through the speakers if all three buttons are pressed at the same time.

PHONES JACK

Plug the headphones into this jack when you want to listen through your stereo headphones.
Release all the SPEAKERS buttons if you want to listen to the sound through your headphones only. (This means that all three buttons will be released).

POWER SWITCH

Flip this switch to the ON position to supply power to the stereo receiver. There will be a short delay when it is set to ON, because the muting circuit has been actuated to suppress the unpleasant noise that is sometimes generated when the power is switched on and off.

TONE SWITCH

Set this switch to ON when adjusting the BASS and TREBLE controls. In the OFF position, it causes the amplifier to operate with a flat frequency response.

TWIN BASS AND TREBLE CONTROLS

Use these controls to adjust the bass and the treble.

FUNCTION BUTTONS

Press the function button which corresponds to the program source. Turn the VOLUME control down first before selecting a different function button while the sound from one program source is being reproduced.

FM . . . . . Press this button for FM broadcasts. The FM STEREO indicators light up when the receiver is tuned into an FM stereo broadcast. The sound is automatically received monophonically during FM monophonic broadcasts.

AM . . . . . Press this button for AM broadcasts.

MEMORY MARKERS

These are very convenient for frequent tuning in to the same broadcasting station.

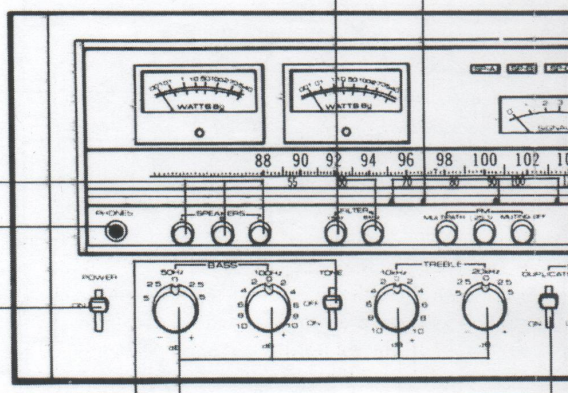

TAPE DUPLICATE SWITCH

Set this switch to ON when you want to duplicate or edit a pre-recorded tape using two tape decks.

TAPE MONITOR SWITCHES (1, 2)

Set switch 1 to ON with a tape deck which is connected to the TAPE 1 jacks (REC and PLAY) when you want to monitor the playback or recording of a tape. The tape on a deck which is connected to the TAPE 2 jacks (REC and PLAY) can be similarly monitored by setting switch 2 to ON.

NOTE:
Set these switches to the upper (off) position when listening to records or a broadcast.

Continued next page

AUX. . . . . Press this button when listening to an audio component connected to the AUX input jacks.

PHONO 2/MIC . . Press this button when playing a record on the turntable connected to the PHONO 2 jacks, or when using a microphone which you have plugged into the MIC jack.

PHONO 1 . . . . . Press this button when playing a record on the turntable connected to the PHONO 1 jacks.

NOTES:

1. *Unplug the microphone from the MIC jack when you do not intend to use the microphone otherwise you will not be able to use the PHONO 2 jacks.*
2. *Only one function button should be pressed at a time.*

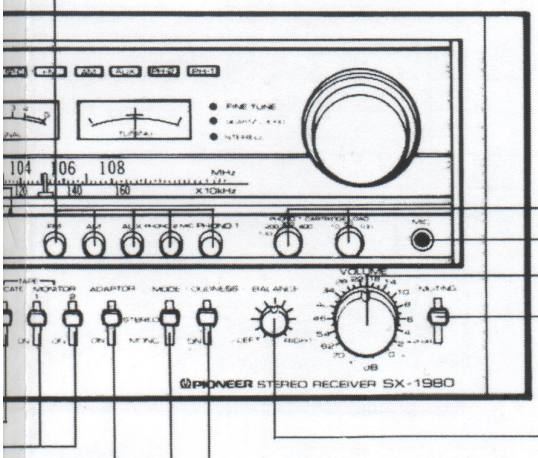

MODE SWITCH

Use this switch for selecting mono or stereo performances.

STEREO: Set to this position for normal stereo operation.

MONO: When set to this position, the left and right channel signals will be mixed and reproduced monophonically from both speaker systems.

ADAPTOR SWITCH

Set this switch to ON when reproducing sound from an optional component which has been connected to the ADAPTOR jacks. Always set it to its upper position if you are not using a component with these terminals.

PHONO 1 CARTRIDGE LOAD SWITCH

Use this knob to select the input impedance (ohms) and the input capacitance (pF) in accordance with the specified load impedance and load capacitance of the moving magnet (MM) cartridge connected to the PHONO 1 jacks.

MIC JACK

Plug your microphone into this jack.

The microphone signals are reproduced in mono through the left and right speakers.

NOTE:

A high impedance (approx. 50 kilohms) dynamic type microphone with a standard plug can be connected to this jack.

VOLUME CONTROL

Use this control to adjust the output level to the speakers and headphones. Turn it clockwise to increase the output level. No sound will be heard if you set it to ∞. The scale is graduated in dB which indicate the attenuation when the maximum output level is 0dB.

MUTING SWITCH

Set this switch to the −20dB position to attenuate the audio output indicated by the VOLUME control by 20dB. There is no need to adjust the VOLUME control if you use this switch when turning down the audio output temporarily and when changing over records or tapes.

BALANCE CONTROL

Use this control to balance the volume of the left and right channels. First, however, set the MODE switch to MONO, and adjust so that the sound appears to come from somewhere exactly between the two speakers. If the sound appears to be louder on the right, it means that the volume of the right channel is higher. Turn the BALANCE control to the left and adjust. Conversely, if the sound appears to be louder on the left, it means that the volume of the left channel is higher. Therefore, turn the BALANCE control to the right and adjust. After adjusting, return the MODE switch to STEREO.

LOUDNESS SWITCH

Set this switch to ON when listening at a low volume. The frequency response of the human ear varies according to the listening volume, and setting this switch to the ON position compensates for hearing response by emphasizing the bass and treble.

POWER METERS

These power meters allow you to read out the rated power level when speakers with a nominal impedance of 8 ohms are connected to the receiver's speaker terminals.

NOTE:
These values are related to the impedance of the speakers and they vary according to the frequency. In order to find out the exact output level, connect an 8-ohm dummy load instead of the speakers.

SIGNAL METER

When tuning in to an AM or FM station, the optimum reception position is indicated by the maximum deflection of the meter pointer to the right.

QUARTZ-LOCKED INDICATOR

When you let go of the tuning knob which has been used to tune an FM station for optimum reception, the FINE TUNE indicator will go off and this indicator will come on.
The automatic phase control circuit is actuated and it tunes the receiver correctly into the frequency of the broadcasting station and locks on to this frequency. (This indicator will not light up with stations whose broadcasting frequency is not a multiple of 100kHz).

FINE TUNE INDICATOR

This indicator lights up to show the optimum tuning position on the tuning dial of an FM station when the pointer of the TUNING meter deflects to near the center.
(This indicator will not light up with stations whose broadcasting frequency is not a multiple of 100kHz.)

SPEAKER INDICATOR

FUNCTION INDICATOR

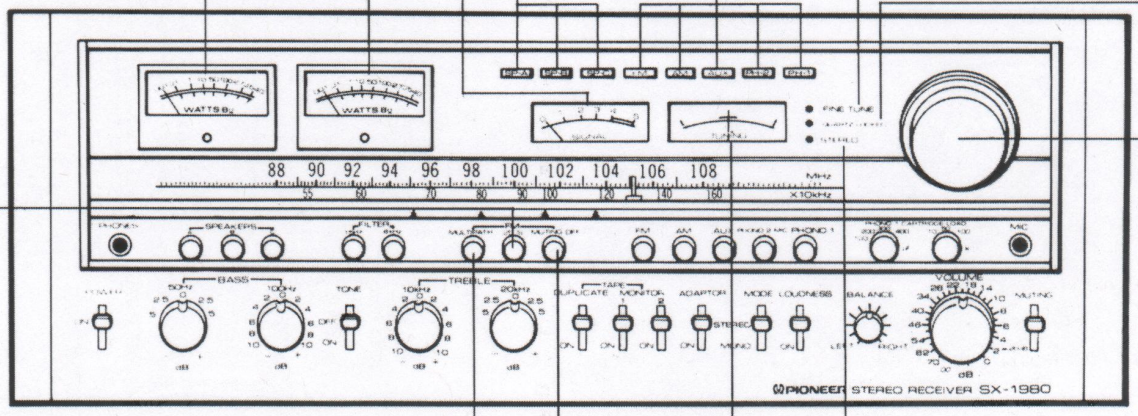

FM MULTIPATH BUTTON

Use this button to detect multipath sound when installing the FM antenna in a position which yields the minimum multipath interference.

FM 25μS BUTTON

Press this button when listening to a Dolby FM broadcast; otherwise keep this button at the released position.

FM MUTING BUTTON

ON (released position) . . . Release this button to suppress unpleasant inter-station noise when tuning in to FM stations.

OFF (depressed position) . Depress this button to pick up weak stations.

STEREO INDICATOR

This indicator lights up when the receiver is tuned to receive an FM stereo broadcast.

TUNING METER

When tuning in an FM station, the optimum reception position is indicated when the meter pointer deflects to dead center. Check that the SIGNAL meter pointer has deflected as far to the right as possible.

TUNING KNOB

Use this to tune in to broadcasting stations.
Select the station and tune for optimum reception by observing the SIGNAL meter for AM stations and both the SIGNAL and TUNING meters for FM stations.

4. BLOCK DIAGRAM

4.1 TUNER SECTION

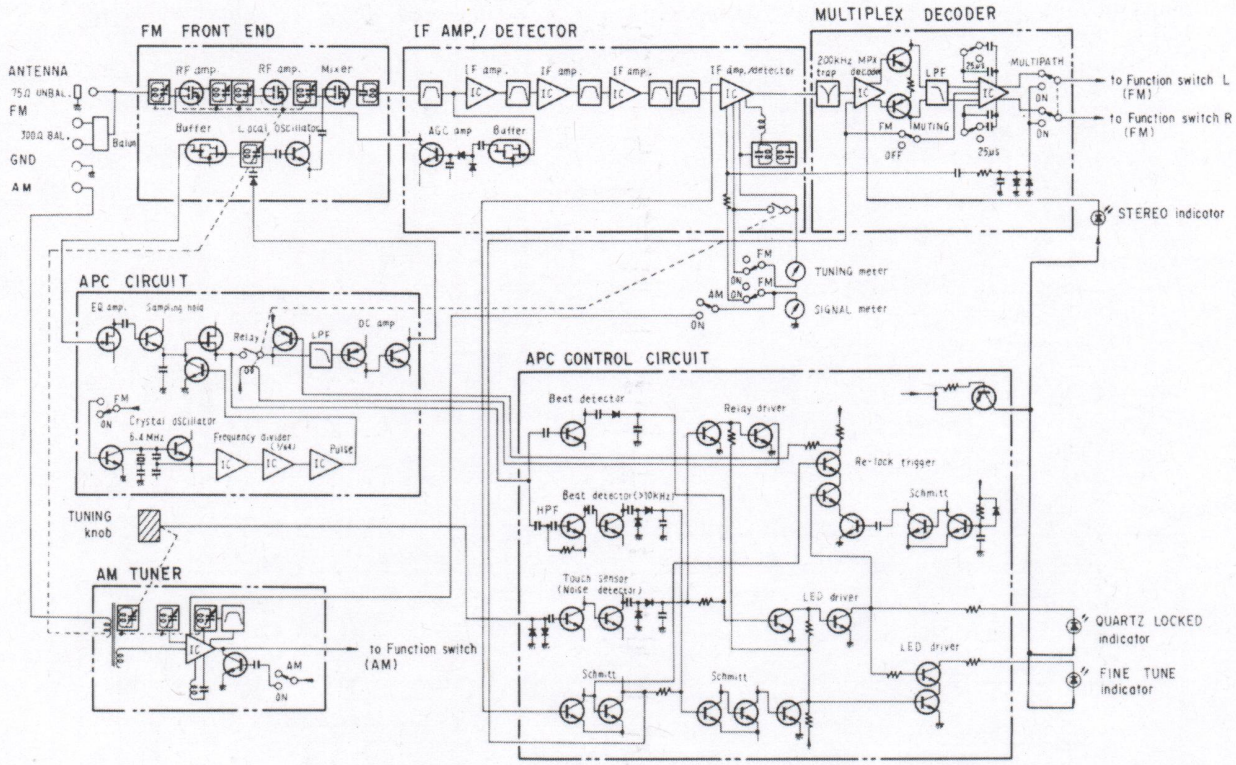

4.2 POWER SUPPLY SECTION

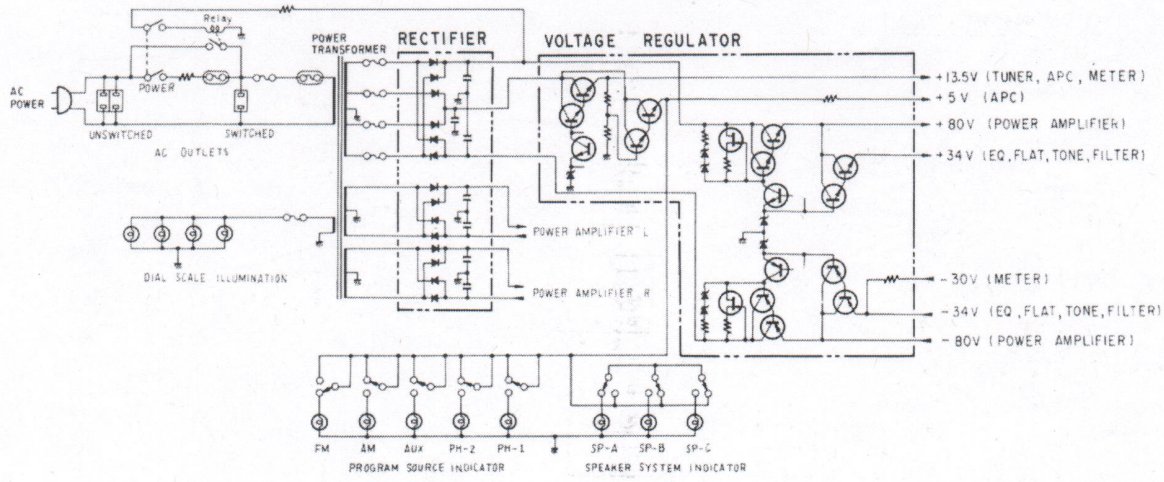

4.3 AF AMPLIFIER SECTION

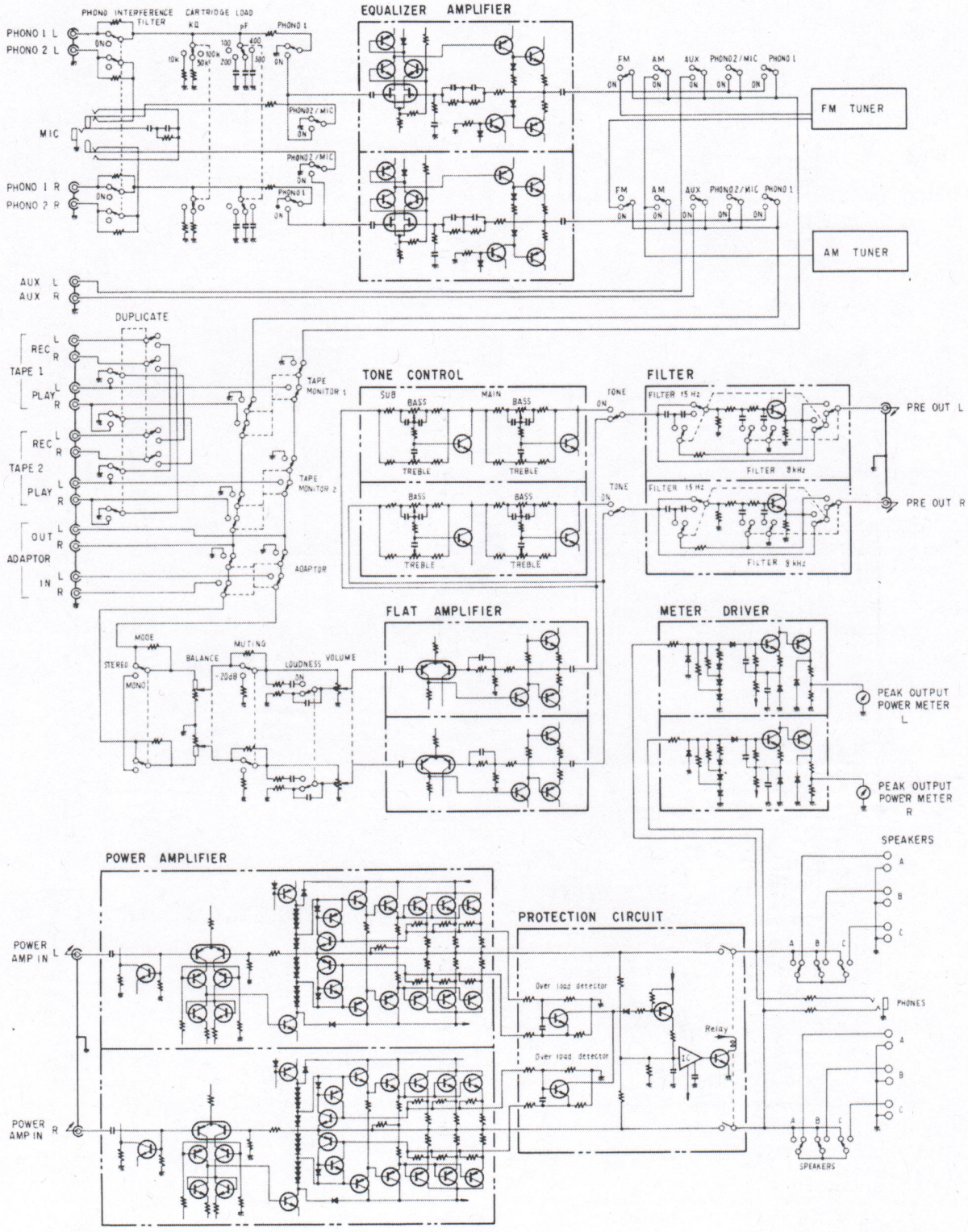

5. LEVEL DIAGRAM

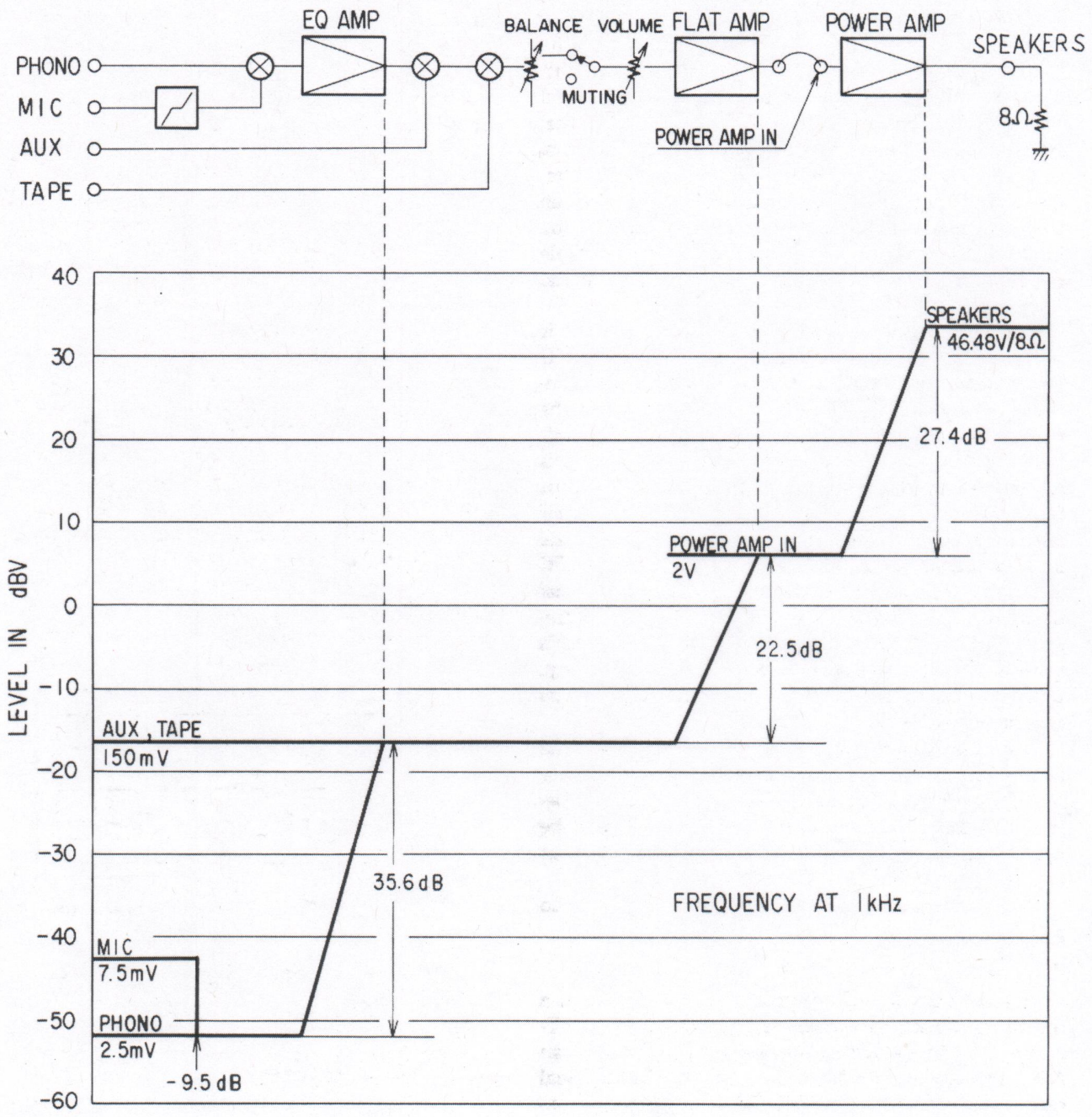

6. CIRCUIT DESCRIPTIONS

6.1 TUNER SECTION

A major feature of the FM tuner section of the SX-1980 is the APC (Automatic Phase Control) system which detects any difference in phase between the front end local oscillator signal and the reference signal generated by the crystal oscillator. This difference is converted into a voltage signal which is then fed back to the local oscillator; locking the phase of the local oscillator signal precisely to that of the reference signal. The frequency of this reference signal is 100kHz, so when the APC circuit is operating, the frequency of the local oscillator will be an exact integer multiple of 100kHz, as will be that of the received signal frequency.

Another important feature of this equipment is the touch sensor circuit. When the TUNING knob is touched by hand, the APC circuit is deactivated, permitting the tuned frequency to be freely varied just as in conventional equipment. When a broadcasting station whose frequency is an integer multiple of 100kHz, and whose input level exceeds a certain fixed level (more than 10μV antenna input conversion) is tuned exactly, and the hand released from the TUNING knob, the APC circuit is activated, locking the phase of the local oscillator frequency exactly to the reference frequency. The stability of the local oscillator at this time is the same as that of the reference frequency, that is, the same high stability as the crystal oscillator itself.

Note, however, that if the frequency of the tuned broadcasting station is not an exact integer multiple of 100kHz, or if the input level falls below the fixed level, the APC circuit will not be activated. In this case, the SX-1980 will function as any other receiver.

For further details on the APC circuit, refer to the section titled "APC Circuit".

6.1.1 FM Front End

The FM front end of the SX-1980 includes a 5-ganged tuning capacitor, a dual-gate MOS FET-equipped 2-stage RF amplifier and mixer, and an NPN transistor-type modified Clapp circuit local oscillator. This local oscillator is a voltage controlled oscillator (VCO) employing a variable capacitance diode in the tuning capacitor. The oscillator frequency is controlled by the APC circuit by means of a control voltage signal applied to this variable capacitance diode. When the APC circuit is not in operation, a constant voltage is applied to the diode. Note that the APC phase comparator signal is passed from the local oscillator output to the APC circuit via a buffer amplifier.

With an AGC (Automatic Gain Control) circuit in the first stage of the RF amplifier, gain is decreased for forced inputs, thereby improving a number of different parameters.

6.1.2 IF Amplifier and Detector

Employs 4 ICs and 5 dual-element ceramic filters. The IC (HA1201) of the first 3 stages constitutes a single-stage differential amplifier current-limiting limiter. The IC (PA3001-A) in the forth stage (an improvement on the former IF system IC, HA1137), includes an IF limiter amplifier, quadrature detector, meter drive, and other circuits. Performance in terms of distortion, S/N ratio, delay characteristics, and other parameters, shows a marked improvement in comparison to the HA1137. Forthermore, the AGC control voltage produces an IF signal from the IF amplifier input stage; this signal then being passed via a buffer amplifier for rectification (AM detection) and amplification.

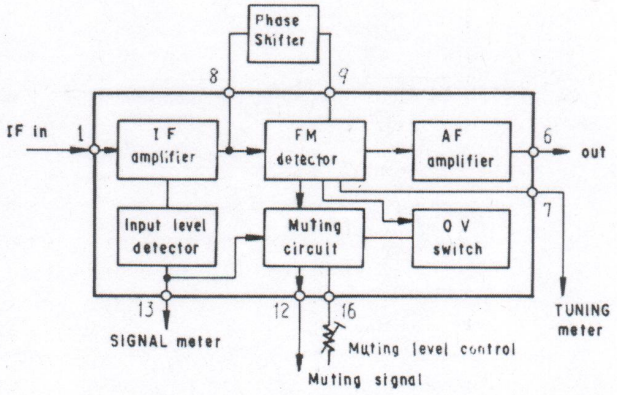

Fig. 6-1 Block Diagram of PA3001-A

6.1.3 Multiplex Decoder

The IC (PA1001-A) employed in this stage is equipped with an NFB Demodulator and Automatic Pilot Canceller which further reduce distortion and improve the S/N ratio (in comparison to the earlier PLL-MPX decoder ICs, HA1196 and HA1156). A major feature of this Automatic Pilot Canceller is that the cancelling level automatically adjusts to the pilot signal level (see Fig. 6-3).

Furthermore, this circuit has also made it possible to raise the dip point of the low-pass filter, and improve the frequency response in the 15kHz region which previously suffered from the effects of filter coil Q.

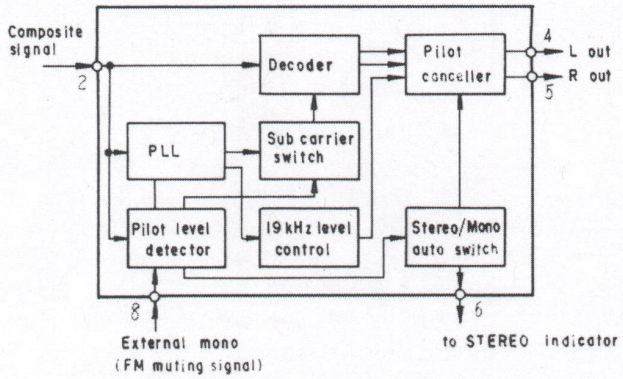

Fig. 6-2 Block Diagram of PA1001-A

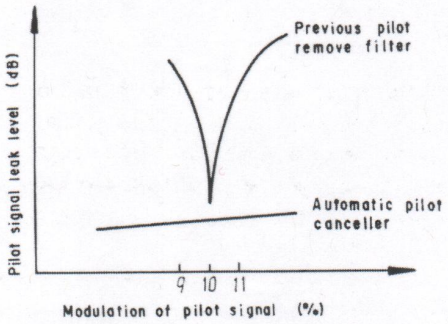

Fig. 6-3 Automatic Pilot Canceller

6.1.4 Audio Output Circuit

The IC (PA1002-A) employed in this stage incorporates a high S/N ratio (greater than 90dB) AF amplifier, a muting gate circuit, and the muting control circuit activated when the power supply is switched on and off. (See Fig. 6-4 for the block diagram of this IC).

The muting gate is an electronic circuit which connects the signal path to ground, but with practically no noise generated whenever it is activated or de-activated. This circuit is activated by muting signals (DC voltage) applied to no.8 pin and the power supply ON/OFF muting control circuit.

The de-emphasis characteristics are determined by use of the NFB loop in the AF amplifier.

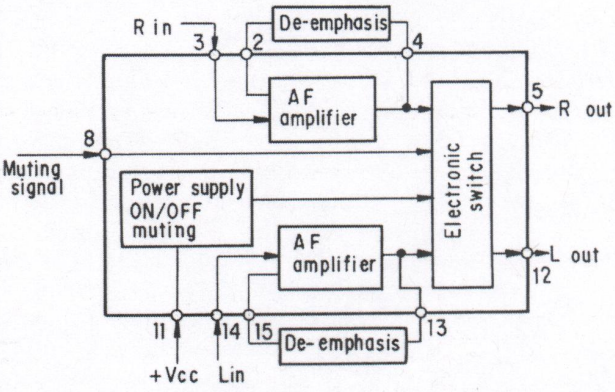

Fig. 6-4 Block Diagram of PA1002-A

6.1.5 APC Circuit

The contact of the relay shown in the APC Circuit block diagram below (Fig. 6-6) is opened and closed by the APC control circuit. Whenever the prescribed conditions are fulfilled, the contact is closed, and the PLL (Phase Locked Loop) circuit is activated.

Pulse Generator

The pulse generator employed in the SX-1980 consist of three digital ICs (for logic circuits) and a single transistor crystal oscillator (see Fig. 6-5). Although a 100kHz crystal resonator could have been used (since the required pulse repetition frequency is 100kHz), a 6.4MHz resonator is preferable because of its frequency stability, shape, size, cost, and other factors. This 6.4MHz signal is divided by a 6-flip-flop frequency divider to form the 100kHz square wave signal, which is then converted into a pulse signal by the one-shot multivibrator and inverter (formed by 3 NAND gates).

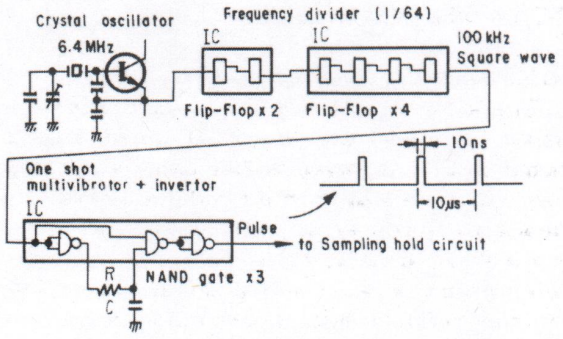

Fig. 6-5 Pulse Generating Circuit

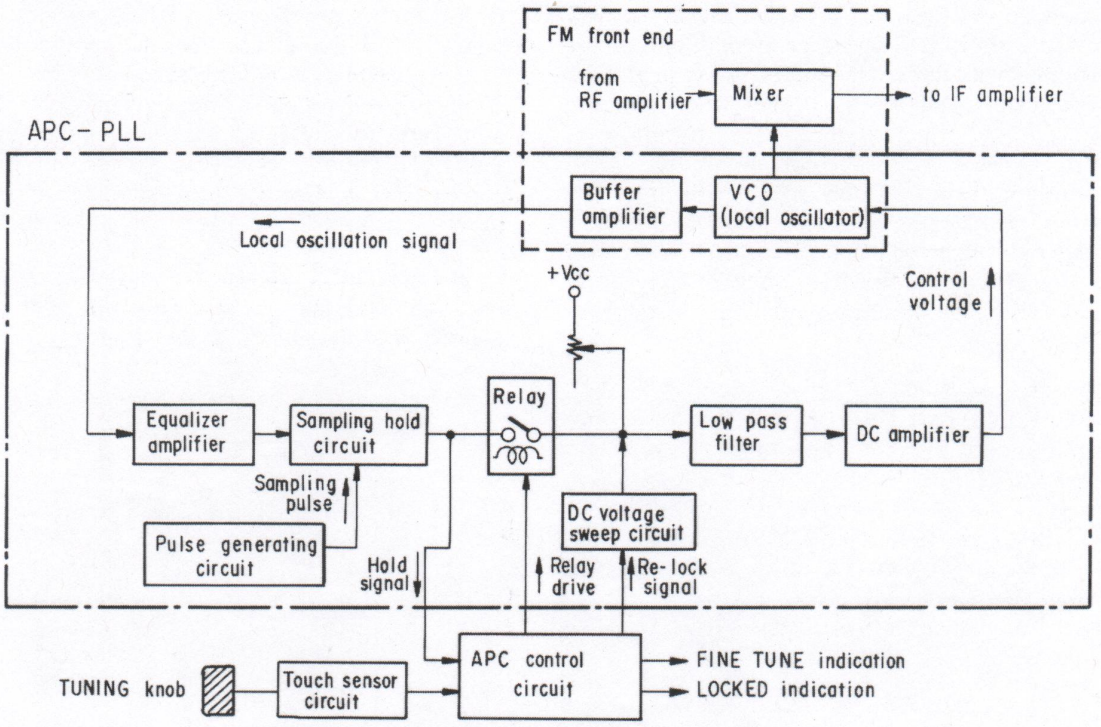

Fig. 6-6 Block Diagram of APC Circuit

Sampling Hold Circuit

This circuit is the phase comparator which converts the phase difference between the reference pulse and local oscillator signal into the DC voltage signal. The conversion efficiency of this type of circuit is much higher than circuits which employ a multiplier to hold the signal. Consequently, a DC amplifier of quite low gain may be used in the following stage, thereby contributing to improved stability and S/N ratio. Furthermore, since the pulse width is not critical in this type of circuit, there is no need for extremely narrow pulse width.

A simplified circuit diagram is shown in Fig. 6-7, and the waveform generated shown in Fig. 6-8. In order to simplify the description, the pulse width will be assumed to be very narrow.

The local oscillator signal is applied to the base of Q_2 via the equalizer amplifier. When the pulse signal is then applied to the base of Q_3, Q_3 will turn on, and C_5 discharge rapidly. Current will also flow through Q_2 at this time. However when there is no pulse on Q_3, Q_3 will turn off, and during this instant, a reflection pulse will be generated by the circuit's inductance component. C_5 will thus be recharged, with the recharge voltage being held until the next pulse signal arrives (10μs later) due to the relatively high input impedance on Q_4 (FET). This hold voltage is the voltage of the reflection pulse and local oscillator signal, and will vary according to the phase of the local oscillator signal during sampling (see Fig. 6-8).

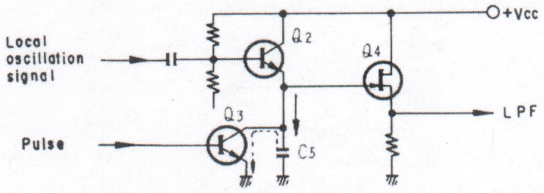

Fig. 6-7 Sampling hold Circuit

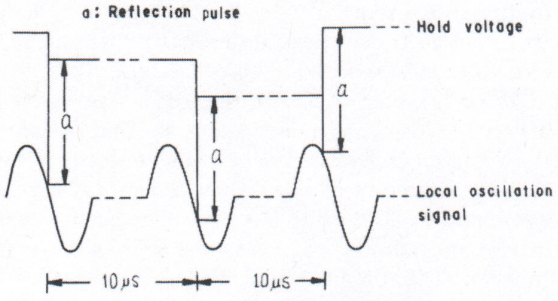

Fig. 6-8 Waveform of Sampling Hold

If the frequency of the local oscillator signal is an integer multiple of 100kHz, the phase will be the same every 10μs during sampling, and the hold voltage will remain constant. If it is not an integer multiple, the hold voltage will vary constantly in a step-wise fashion. If the envelope of the step-wise change is regarded as an AC signal, the period of fastest change will be during alternate sampling of the peaks and dips of the waveform every 10μs, which means the frequency will be 50kHz. Therefore, the frequency of the sampling hold-signal beat components will range from 0 to 50kHz.

LPF and DC Amplifier

This LPF (low-pass filter) is the PLL loop filter which determines the APC capture range and elimination of the sampling pulse. Since the conversion efficiency of the phase comparator (sampling hold circuit) is high, the gain of the DC amplifier is low. The diode D_1 incorporated in this circuit is used in loop temperature compensation.

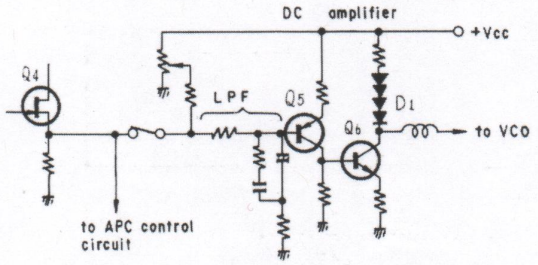

Fig. 6-9 LPF and DC Amplifier

VCO and Equalizer Amplifier

The FM front-end local oscillator incorporates a variable capacitance diode as part of its tuning capacitor, thereby making this Voltage Controlled Oscillator (VCO). This diode is reverse biased, and a control voltage is applied to the anode, resulting in the diode capacitance increasing when the control voltage is raised, and decreasing when the control voltage is lowered.

The main part of the tuning capacitor consists of a variable capacitor, but since the capacitance of the variable capacitor varies considerably according to the frequency of the received signal, the relative proportion of capacitance provided by the variable capacitance diode will also vary quite significantly. In this kind of situation, the APC circuit would not operate equally at different frequencies. Therefore, the relative capacitance of the variable capacitance diode must be kept at a constant level, which in turn requires a varying amount of compensation, or equalization, at different frequencies.

The sampling hold voltage (the basis for the VCO control voltage) may be varied by the input amplitude of the local oscillator signal applied to the hold circuit. For this reason, an amplitude compensation circuit (i.e. equalizer circuit) has been incorporated in the stage prior to the hold circuit.

This equalizer amplifier "equalizes" the amplitude by utilizing the slope of the FET-equipped amplifier resonance characteristics.

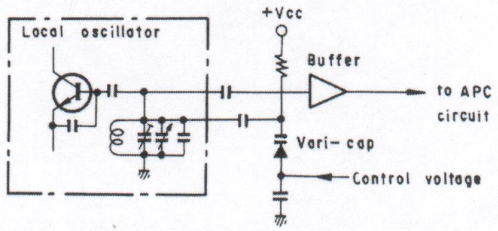

Fig. 6-10 VCO Circuit

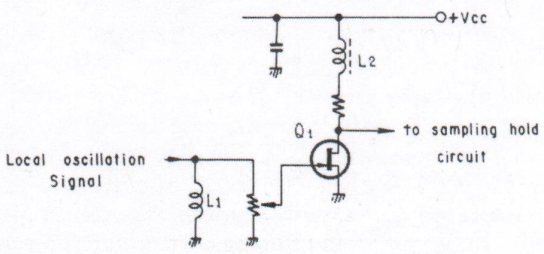

Fig. 6-11 Equalizer Amplifier

6.1.6 Structure of APC Control Circuit

An outline of the APC control circuit is shown in Fig. 6-12 below.

Beat Detector I

This circuit is AC coupled to the output of the sampling hold circuit. Any beat components in the sampling hold signal are amplified and rectified, and presented as DC voltage signals.

When the local oscillator signal is an integer multiple of 100kHz, there will be no output (DC voltage) from this circuit because there will be no beat components. Whenever the frequency deviates from an integer multiple, beats will occur, and an output signal will be generated.

Beat Detector II

After the sampling hold signal is passed through a high-pass filter (fc = 10kHz), and consequently amplified and rectified, this second beat detector circuit detects beat components (as DC voltage) above 10kHz.

If the frequency of the local oscillator signal deviates by less than ±10kHz from the integer multiple of 100kHz, there will be no output. However, once the deviation exceeds ±10kHz, this circuit will produce a DC voltage output signal. Since the capture range of this APC circuit is greater than ±10kHz, the APC-PLL system may be locked as soon as the Beat Detector II output disappears.

Touch Sensor

The purpose of this circuit is to detect whether the TUNING knob is in contact with the user's hand or not. The noise voltages generated within the user's hand or not. The noise voltages generated within the human body, and relayed via the TUNING knob, are detected by the touch sensor circuit, and subsequently amplified and rectified into a DC output. In other words, whenever the user's hand is in contact with the TUNING knob, this circuit will produce an output.

Note, however, that mis-operation of this circuit may occur under the following circumstances:

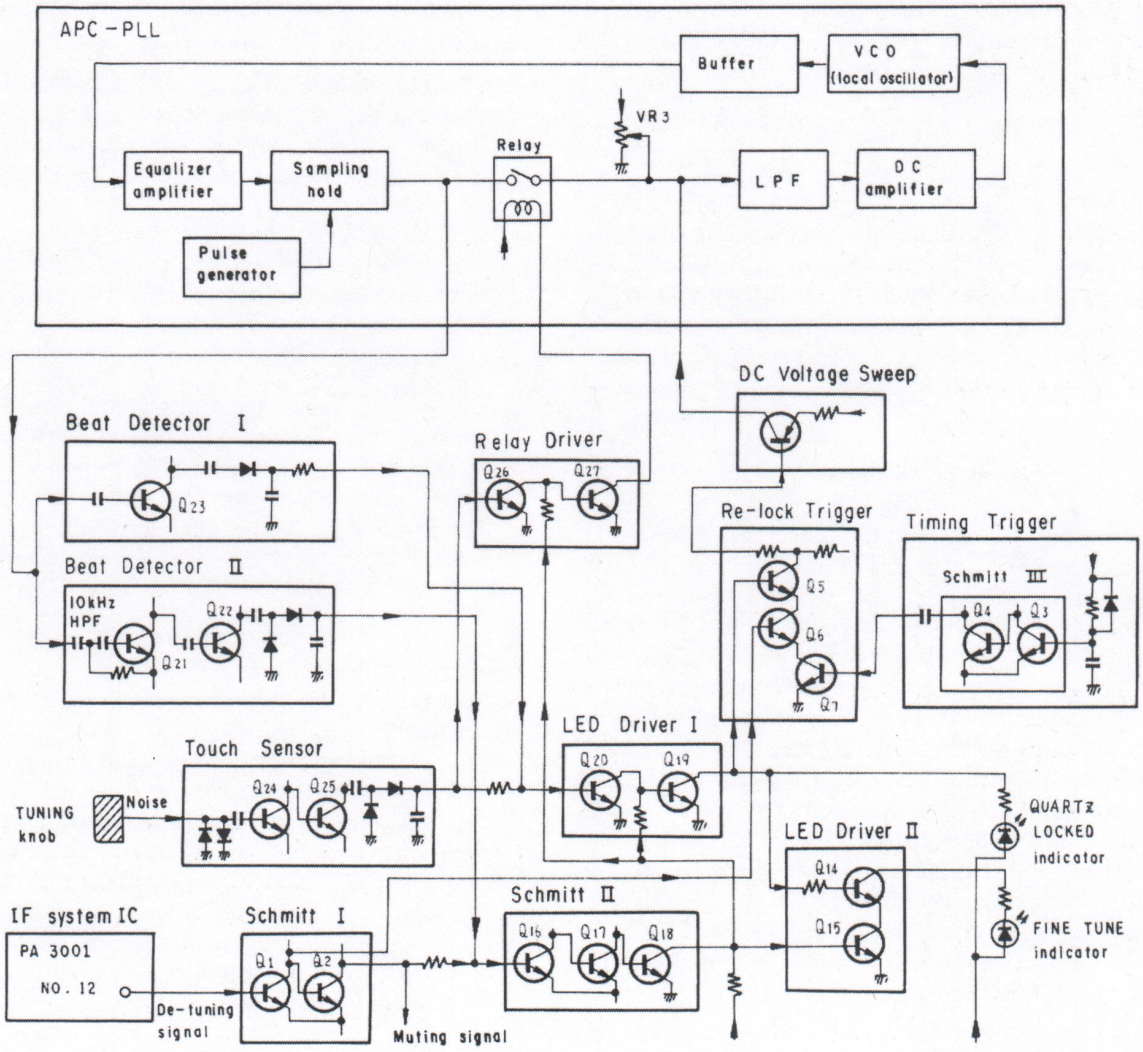

6-12 Outline of APC Control Circuit

1. A strong electromagnetic source located close to the receiver—due to noise voltages induced in the knob.
2. User makes contact with the knob and front panel simultaneously—due to reduction of noise voltages generated in the human body.
3. User makes contact with TUNING knob while wearing gloves or other similar apparel—in this case the touch sensor circuit is not capable of detecting the noise voltage.

Schmitt I

This Schmitt circuit is designed to invert during de-tuning. A DC voltage appears at no.12 pin of the IF system IC (PA3001-A) whenever there is more than ±70kHz detuning, or the input level is very weak (less than 10μV antenna input conversion), which is applied to the input of this circuit. On the output side, however, two different types of "outputs" are employed. The negative output (no output when input signal is applied) is passed to the Re-lock Trigger Circuit, and the positive output (output produced when input signal is applied) is connected to the Schmitt II circuit.

Schmitt II

This circuit is a Schmitt plus inversion circuit which produces an output when there is no output from either the Beat Detector II or Schmitt I circuits. That is, a DC voltage output is produced only when the frequency of the received signal is within ±10kHz of the frequency of the broadcasting station (which is an integer multiple of 100kHz).

Relay Driver Circuit

When there is an output from the Schmitt II circuit, but none from the Touch Sensor (which means that the broadcasting station frequency—an integer multiple of 100kHz—has been tuned to within ±10kHz, and the hand removed from the TUNING knob), this relay will activate to lock the APC-PLL system. So with the appearance of the Schmitt II output, and because the local oscillator frequency lies within the APC-PLL capture range, the loop will be completed, and the received frequency tuned exactly, and locked, to the frequency of the broadcasting station. There are actually two sets of contacts in this relay, the second pair being used to complete the TUNING meter circuit. The TUNING meter is consequently moved to dead center by activation of this relay.

LED Driver I

When there is no output from either Touch Sensor or Beat Detector II circuits, the appearance of the Schmitt II output also activates this LED driver I circuit, which then lights up the QUARTZ LOCKED indicator to show that the APC-PLL system has been locked.

LED Driver II

The LED driver II circuit lights up the FINE TUNE indicator. This will occur when there is an output from the Schmitt II circuit, and from the Touch Sensor and Beat Detector I circuits, indicating that the broadcasting station frequency (integer multiple of 100kHz) has been tuned to within ±10kHz of the station's center frequency. If the hand is then removed from the TUNING knob, the relay is activated, and the APC-PLL system brought into play, and the QUARTZ LOCKED indicator lights up. Therefore, the FINE TUNE indicator will turn off.

DC Voltage Sweep

The purpose of this circuit is to forcibly raise the APC control voltage by means of a signal applied by the Re-lock Trigger circuit.

Timing Trigger

When the power supply is first turned on, this Timing Trigger generates as slightly delayed pulse signal.

Re-lock Trigger

When there is no de-tuning signal applied to the IF system IC (PA3001-A), but still an output from Beat Detector I (i.e. a tuned frequency separated from the station's center frequency by ±10kHz to ±70kHz), and a pulse signal applied from the Timing Trigger, this Re-lock Trigger circuit sends a pulse signal to the DC Voltage Sweep circuit.

6.1.7 APC Control Circuit Operation

Operation During Tuning Procedure

1. While turning the TUNING knob (but still more than ±70kHz away from the station frequency), a de-tuning output signal from the IF system IC (PA3001-A) inverts the Schmitt I circuit, but there is no output from the Schmitt II circuit; however because the TUNING knob is being handled, there is an output from the Touch Sensor circuit. Therefore, the APC circuit relay will be open, and the FINE TUNE and QUARTZ LOCKED indicators will both remain off.

2. When the broadcasting station frequency is tuned to within ±10kHz ~ ±70kHz of the center frequency, there will no longer be an output from the IF system IC, but because of the output (DC voltage) from Beat Detector II, there will still be no Schmitt II output. The Touch Sensor will still produce an output, and the APC circuit relay will still be open. Therefore, neither the FINE TUNE nor QUARTZ LOCKED indicators, will light up at this stage.
3. When the broadcasting station has been tuned to within ±10kHz, the Beat Detector II output will stop, the Schmitt II output appear. And there also be a Touch Sensor output, the FINE TUNE indicator will light up.
4. When the hand is then removed from the TUNING knob (with the station tuned to within ±10kHz), the Touch Sensor output stops; but because of the Schmitt II output, the APC circuit relay will be closed, thereby activating the PLL circuit. Since the received frequency is now within the PLL capture range, the PLL will lock. The Beat Detector I output will consequently cease, resulting in the QUARTZ LOCKED indicator is turning on and the FINE TUNE indicator is turning off.

Re-lock Operation

If the power supply was turned off after once tuning into a particular broadcasting station (and the APC-PLL system locked), and then turned on again, the APC-PLL system would not necessarily automatically re-lock again without this Re-lock function, since the APC-PLL capture range is narrower than the lock range.

When the power supply is turned on, the local oscillator frequency sweeps from high frequency downwards towards the stationary status frequency. If the PLL lock status was either within the capture range or below the lower limit when the power supply was turned off, this local oscillator frequency sweep will have to pass through that capture range frequency again when the power supply is turned on; so in this case, the PLL would be locked to that former frequency.

On the other hand, however, if the PLL lock status was above the upper limit of the capture range when the power supply was last turned off, the local oscillator frequency sweep would not reach the former capture range frequency when the power supply was turned on again. Therefore, the PLL would not be capable of re-locking to the former frequency. For this reason, the local oscillator frequency is fallen forcibly in order to make the sweep pass through the former capture range frequency, this being achieved by raising the control voltage of the VCO.

The Timing Trigger circuit slightly generates a pulse output after the power supply is turned on. If the tuned frequency is within the −70kHz to +10kHz range at this time, the APC-PLL system will lock before the pulse signal leaves the Timing Trigger circuit, and there will be no Re-lock Trigger circuit pulse output.

If the tuned frequency lies within the +10kHz to +70kHz range of the station's center frequency when the power supply is turned on again, a pulse signal from the Re-lock Trigger circuit will activate the DC Voltage Sweep circuit which serves as a switching circuit for the DC power supply. Activation of this circuit results in the application of a DC voltage to the PLL circuit. The VCO control voltage is thus raised, thereby falling the local oscillator frequency temporarily.

6.1.8 AM Tuner Stage

The AM tuner employs a 3-ganged variable capacitor coupled to an IC (HA1197) which incorporates a 1-stage RF amplifier, a 2-stage IF amplifier, and the detector (see Fig. 6-13 below).

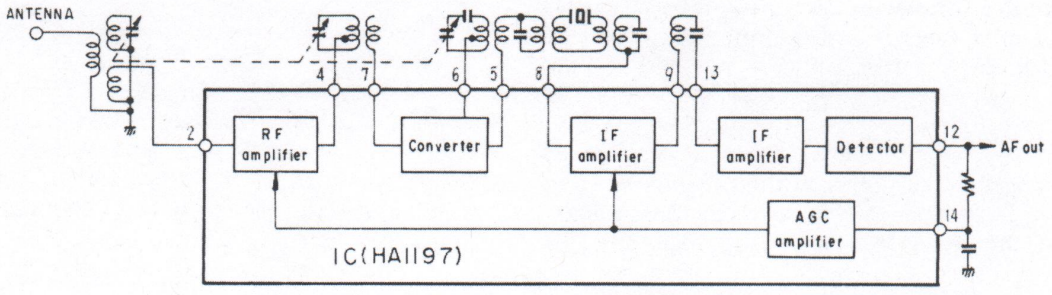

Fig. 6-13 AM Tuner Section

6.2 PREAMPLIFIER SECTION

6.2.1 Phono Circuits

Cartridge Load Selectors

The input resistance and input capacitance of the PHONO 1 input may be varied. The equalizer amplifier input resistance is set to 100kΩ, and the input capacitance to 100pF. By operation of the CARTRIDGE LOAD selectors, different resistors and capacitors will be inserted in parallel with the PHONO 1 input circuit. Three different input resistance levels (10kΩ, 50kΩ, and 100kΩ) and four different input capacitance levels (100pF, 200pF, 300pF, and 400pF) are available, permitting the user to select optimum load conditions for the phono cartridge being employed in the turntable connected to the PHONO 1 terminals.

Microphone Input Circuit

When a microphone is plugged into the MIC jack, the PHONO 2 input circuit (both L and R channels) is connected to the microphone input circuit. Since the equalizer amplifier also serves as the microphone amplifier, the frequency response of the microphone input circuit is designed to be the inverse of that of the equalizer amplifier, thereby obtaining a final flat frequency response.

NOTE:
When the microphone is plugged into the MIC jack, the PHONO 2 terminals will be open, and will not be available for use as a phono input.

Phono Interference Filter

Because of the high sensitivity of the phono input circuits, a certain amount of radio frequency interference may occur. This may be reduced by simply turning the rear panel PHONO INTERFERENCE FILTER on (thereby connecting a resistor in series with the phono input circuits).

Equalizer Amplifier

The first stage of the equalizer amplifier (see Fig. 6-14) features a recently developed ultra-low-noise twin FET (Q_1, 2SK131) and a differential amplifier formed by two NPN transistors (Q_2 and Q_3) in a cascade connection, with the load circuit forming a current mirror (Q_4 and D_1) circuit.

This cascade connection helps to keep the FET drain to scource voltage at a low level, thereby suppressing the noise level in the gate current. The FET load impedance is also lowered, consequently avoiding the deterioration in the high and frequency response caused by the drain to gate reverse transfer capacitance (Miller effect). Furthermore, the current mirror action serves to operate this stage in push-pull mode, thereby eliminating the even-numbered harmonics, as well as doubling the gain.

The following stage (Q_5) makes the load circuit a constant-current source (Q_6), thereby obtaining a high voltage gain.

The output stage is a symmetrical complementary SEPP (Q_7 and Q_8), while the RC network consists of metal film resistors (deviation of less than ±1%) and polypropylene film capacitors (deviation of less than ±2%).

The major specifications of this circuit are (1) S/N ratio of 87dB, (2) input level of 300mV (THD 0.03%), and (3) equalization deviation of ±0.2dB (20Hz to 20,000Hz).

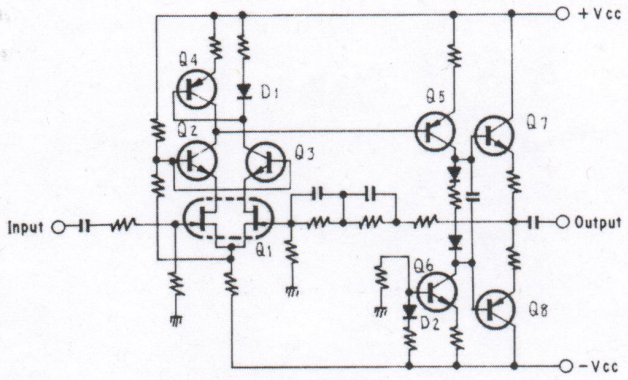

Fig. 6-14 Equalizer Amplifier

6.2.2 Flat Amplifier

The flat amplifier, located just prior to the tone control circuit, amplifies signals to the required level (gain: 22.5dB), and passes the signals on to the tone contorl circuit at low impedance. The first stage of this 3-stage direct-coupled amplifier (see Fig. 6-15) is a PNP dual-transistor differential amplifier, and the output stage is a complementary symmetrical SEPP circuit.

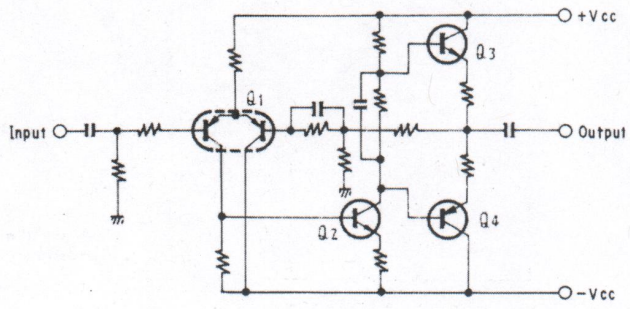

Fig. 6-15 Flat Amplifier

6.2.3 Tone Controls

The SX-1980 features two pairs of tone control circuits (twin tone controls), each with a different turnover frequency. The main tone controls are similar to other regular tone controls, while the sub tone controls permit variation of the frequency response at the very high and very low ends. Both main and sub tone controls apply C-B feedback to a single transistor amplifier, with frequency selection provided within the feedback loop, and the frequency response altered when these frequencies are changed.

All of these circuits may be by-passed by simply putting the TONE switch into the OFF position.

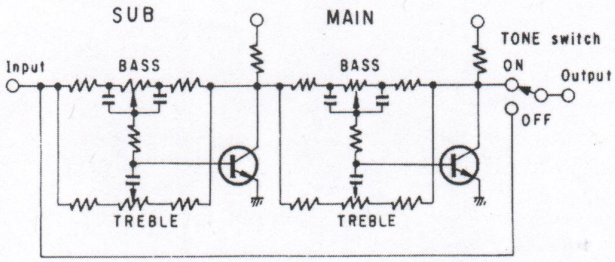

Fig. 6-16 Basic Circuitry of Tone Controls

6.2.4 Filter Circuits

The filters employed in this receiver are −12dB/octave NFB-type active filters. By coupling the emitter-follower to RC passive filters, peaks have been obtained in the region of the cut-off frequencies, thereby sharpening the "knee characteristics" of the RC passive filters.

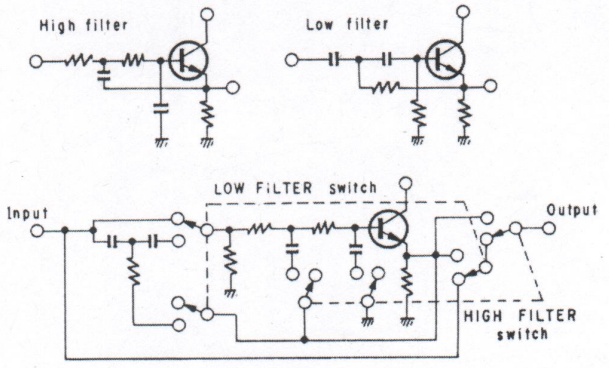

Fig. 6-17 Basic Circuitry of Filters

6.3 POWER AMPLIFIER SECTION

6.3.1 Amplifier Circuitry

See Fig. 6-18 for the basic outline of the power amplifier circuitry. The first stage is a differential amplifier formed by a cascade connection between the dual transistor (Q_2) and the PNP transistors (Q_3 and Q_4), while the load circuit forms a current mirror (Q_5 and Q_6) circuit. This cascade connection lowers the Q_2 load impedance, and prevents the deterioration of the high-end frequency response due to the collector-to-base reverse transfer capacitance (Miller effect). The current mirror serves to make this stage operate in push-pull mode, thereby eliminating the even numbered harmonics, and doubling the gain.

Q_1 in the input circuit has been designed to absorb the base current of Q_2 to prevent the appearance of a DC voltage across R_1. Since Q_1 and Q_2 are both transistors, any changes in base current due to heat will be the same, thereby maintaining the base voltage (DC) at 0 volts.

The pre-driver stage (Q_7) connects the load circuit to the constant-current source (Q_8 and D_1), thereby obtaining a high voltage gain.

The power stage ($Q_9 \sim Q_{18}$) is a 3-stage Darlington connection triple-SEPP capable of delivering 270 watts per channel at 8Ω (0.03% THD).

Because there are no low-end time constants in the NFB circuit (R_2, R_3), amplification down to the DC region becomes possible, resulting in an outstanding low-end frequency response. (Note, however, that DC inputs will be cut by the input coupling capacitor).

6.3.2 Drive Voltage Limiter

Saturation caused by over-driving of the power stage can cause abnormal functioning of the NFB circuit, resulting in a rather unstable performance. This kind of saturation is prevented in the SX-1980 by clipping the drive signal voltage for the power stage. The driver voltage limiter responsible for this operation consists of $D_4 \sim D_7$. The signal DC level is first shifted by D_2, D_3, and VR_2, and the bias voltage applied to the power stage. D_5 and D_6 further shift the signal DC level, and if the signal voltage is excessively high, D_4 and D_7 are employed to clip that level.

NOTE:
At high output levels, the value of Vcc1 will be lower than the value of Vcc2.

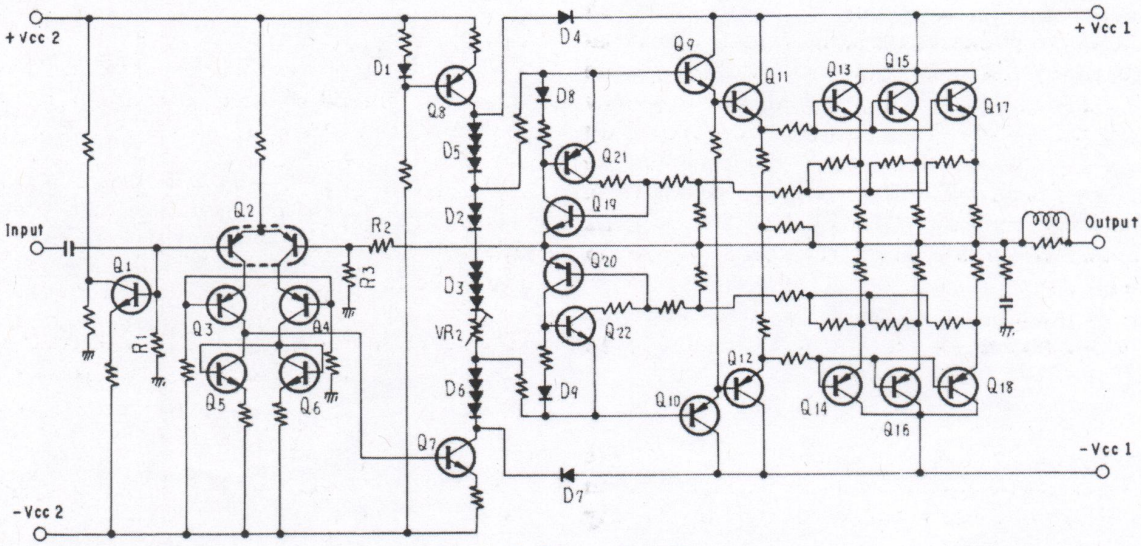

Fig. 6-18 Power Amplifier

6.3.3 Power Limiter

If high output power is employed with relatively low load impedances, the current flowing through the power transistors may reach dangerously high levels. In order to prevent such excessive flow of current, the output power is controlled by clipping the drive signal voltage level. This power limiter stage consists of $Q_{19} \sim Q_{22}$.

The bases of Q_{19} and Q_{20} are connected to the emitters of the power transistors. When a large current is passed through the power transistors, the voltage difference generated across the emitter resistance increases, resulting in the drive signal being passed through Q_{19} and Q_{20} where its voltage is clipped. Q_{21} and Q_{22} are linked to Q_{19} and Q_{20} in order to sharpen this clipping action.

The power limiter in this circuit will be activated when output power reaches approximately 300 watts for a 4Ω load.

6.3.4 Output Power Meters

The SX-1980 is equipped with a pair of output power meters which read peak power values from 0.01 to 540 watts (when driving an 8Ω load) without the need to switch range scale. The drive circuit for these meters is outlined in Fig. 6-19.

Logarithmic Compression Circuit

This circuit employs the relation between the voltage applied across a diode, and the forward resistance. See Fig. 6-20 for the basic logarithmic compression circuit. The forward resistance through D_1 is large when the input voltage Vin applied across D_1 is very small, but decreases as (Vin) is increased. The relation between Vin and Vout of this circuit is almost logarithmic, as can be seen from Fig. 6-21.

In actual circuits, a single diode is insufficient to provide an adequate compression range, so 3 diodes are employed, each activated in turn at different levels. The composite result is the attainment of the required compression range.

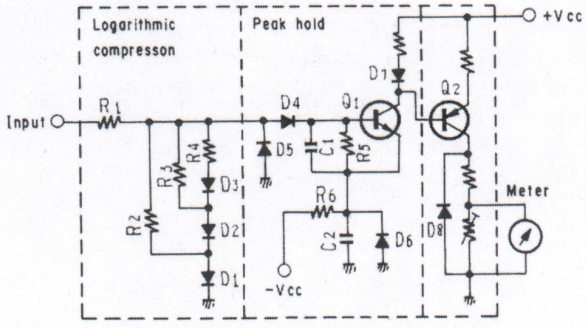

Fig. 6-19 Meter Drive Circuit

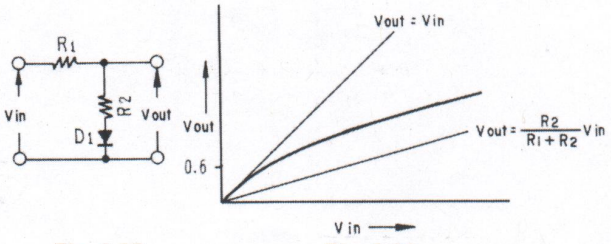

Fig. 6-20 Fig. 6-21

Peak Hold Circuit

The signal from the logarithmic compression circuit is rectified, and then applied to C_1 which is consequently charged up. But since this capacitor is charged up very quickly, the signal voltage peak value is attained. Discharge is relatively slow (the discharge time constant being determined by R_5 and the base current on Q_1) permitting the meters sufficient time to indicate the peak value. R_6, C_2 and D_6 are designed to apply forward bias to D_4, thereby eliminating the leading edge portion of the D_4 rectification characteristics.

The meter drive circuit is also designed to drive the output power meters for positive peak signals only.

6.3.5 Protection Circuit

The purpose of this circuit is to protect both the speakers and the power amplifiers. The relay in the output circuit is automatically opened in any of the following cases:

1. During the "transient operations" when the power supply is turned on and off.
2. Upon detection of an overload, caused by a short circuit in the load.
3. Upon detection of a DC voltage in the output circuit, caused by component failure or accident.

An outline of this circuit is shown in Fig. 6-22. The relay-activating transistor (Qr) is controlled by the IC (PA3004).

Muting Operation When Power Supply is Turned Off and On

When the power supply is first turned on, the voltages on pins 1, 7, and 6 of PA3004 will exceed a prescribed level. If there is no input (DC) on pin no.4, S_2 will be off, and a charging current will commence to flow to the timing capacitor (Ct) connected to pin no.8. Once Ct has been charged up to a level where the voltage on pin no.8 exceeds a prescribed level, S_1 will turn on, thereby applying a bias current from pin no.3 to the relay driving transistor (Qr). Consequently, Qr will turn on, and current will flow through the relay coil to activate the relay, and close the connection in the output circuit. The time required for this connection to close after the power supply is first turned on is several seconds. During this period, any unwanted transient noises will be therefore muted.

When the power supply is turned off, the input (AC) applied to pin no.7 ceases immediately, resulting in S_2 turning on, Ct discharging rapidly, and S_1 and Qr both turning off. The relay is thus opened, disconnecting the output circuit.

DC Voltage Detector

The output circuit is connected to pin no.4 via a low-pass filter (R_8 and C_2). Any DC voltages appearing in the output circuit will also be applied to pin no.4, turning S_2 on. Ct will thus discharge rapidly, turning S_1 and Qr off, thereby releasing the relay, and disconnecting the output circuit from the load.

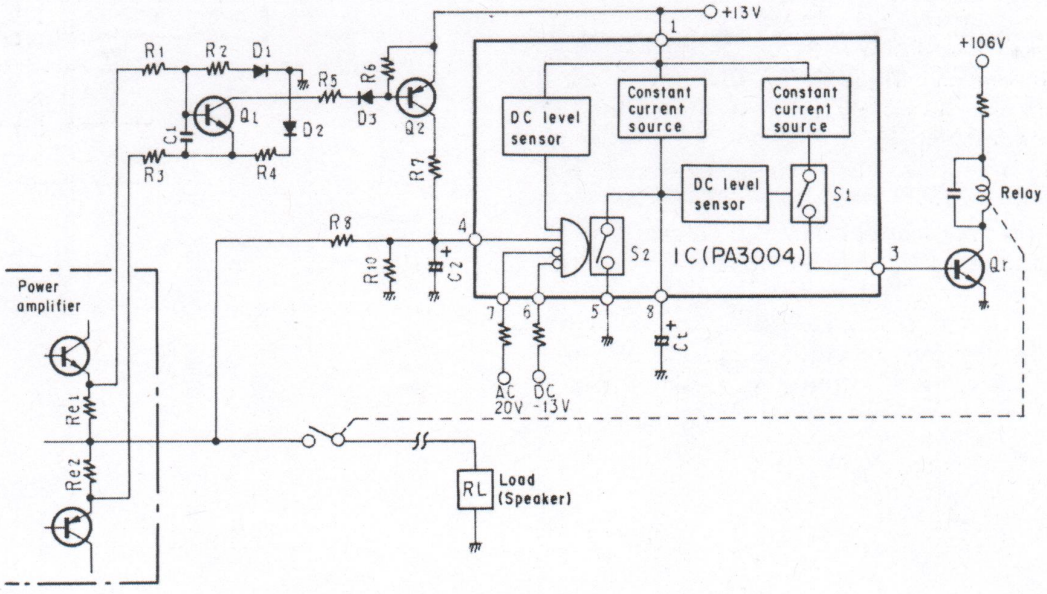

Fig. 6-22 Protection Circuit

Overload Detection

The overload detector circuit incorporates the load (RL) in one side of a Wheatstone bridge (see Fig. 6-23). The base and emitter of a sensing transistor (Q_1) are connected to the opposite corners of the bridge, so if RL decreases, Q_1 will become forward biased. If RL falls below a prescribed value, Q_1 will turn on, thereby passing a current through R_5, D_3 and R_6. Due to the voltage difference generated across R_6, Q_2 will become forward biased, and consequently turn on. A DC voltage will then be applied to pin no.4, turning S_2 on, and resulting in the rapid discharge of Ct, and S_1 and Qr both turning off. The relay will again be released to disconnect the output circuit.

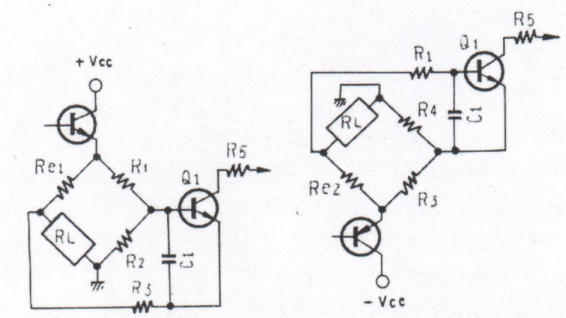

(a) Positive half cycle bridge (b) Negative half cycle bridge

Fig. 6-23 Overload Detector Circuit

6.4 POWER SUPPLY CIRCUIT

6.4.1 DC Power Supply Circuit

The secondary windings of the power transformer in the power stage are separated into independent left and right channels. The power for each side is supplied via independent bridge rectifiers and a pair of 22,000μF capacitors. The tuner section, preamp section, and the voltage amplification stage of the power amp are supplied by full-wave rectifiers and voltage regulators from a winding different from that used for the power stage. The position indicator lamps are also supplied with DC power from the regulated power supply to ensure stable illumination.

6.4.2 Surge Current Suppressor Circuit

Since the SX-1980 employs a large toroidal power transformer and four 22,000μF capacitors in the power supply circuit, the sudden surge of current when the power supply is turned on may reach several hundred amperes. The surge current suppressor circuit used to reduce this sudden surge is shown in Fig. 6-24.

When the POWER switch (S_1) is OFF (i.e. no supply of AC power), the relay contact (S_2) is open. But when this switch (S_1) is turned ON, the sudden surge of current is passed through R_1, thereby greatly reducing the flow of current. When the output DC voltage of the power supply circuit reaches a certain prescribed level, S_2 will close, and R_1 consequently be by-passed. The time required for this to occur, however, is considerably shorter than the time required for the muting circuit to operate when the power supply is turned on, so there is no undue effect upon normal operation of the receiver.

TF_1 is a temperature-sensitive fuse coupled to R_1. If S_2 fails to close due to an abnormality in the power supply circuit or relay, the heat generated in R_1 will cause TF_1 to blow, thereby opening the primary circuit.

When the POWER switch (S_1) is turned OFF, the relay driving circuit is opened, thereby opening S_2 and the primary circuit.

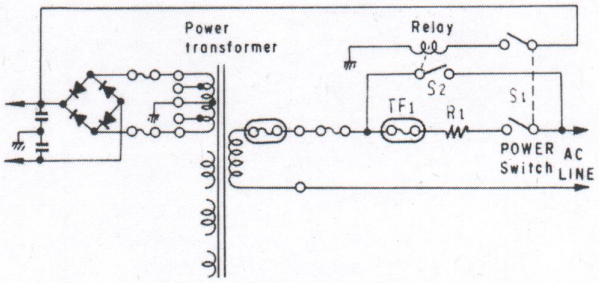

Fig. 6-24 Surge Current Suppressor Circuit

7. DISASSEMBLY

Top Plate

Remove the four screws (❶~❹) to detach the top plate.

Wooden Cover

Remove the two screws on each side of the wooden cover (❺~❽).

Bottom Plate

Remove the fourteen screws (❾~㉒) to detach the bottom plate.

Front Panel

Loosen the setscrews of TUNING and VOLUME knobs with a hexagonal wrench. Remove all the knobs by pulling. Remove the two screws (㉓, ㉔) from the top edge of the front panel. Remove the two nuts from the control shafts.

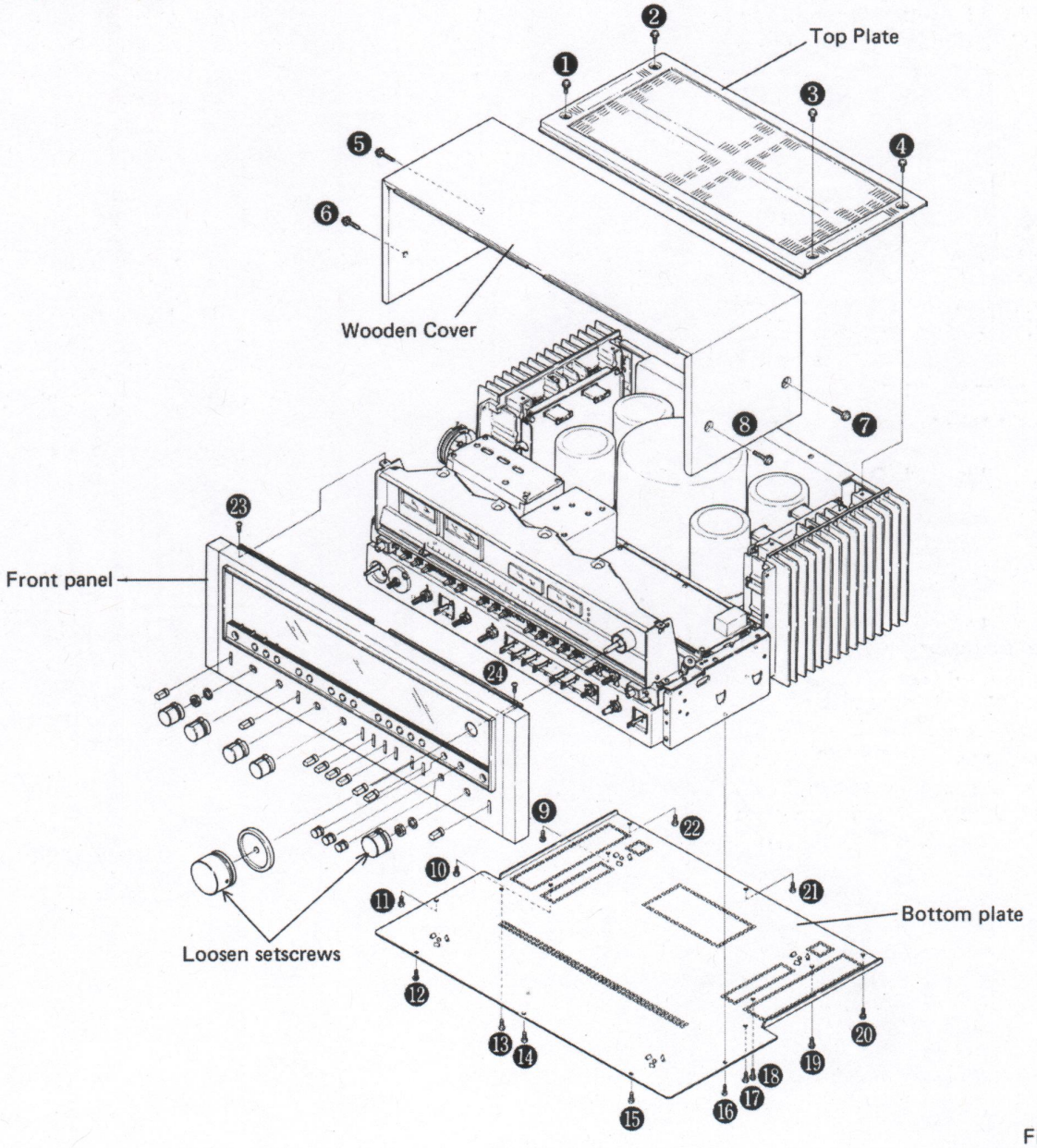

Fig. 7-1

Heat Sink

Remove the two screws (㉕, ㉖) to detach the terminal guard. Remove the four screws (㉗ ~ ㉚).

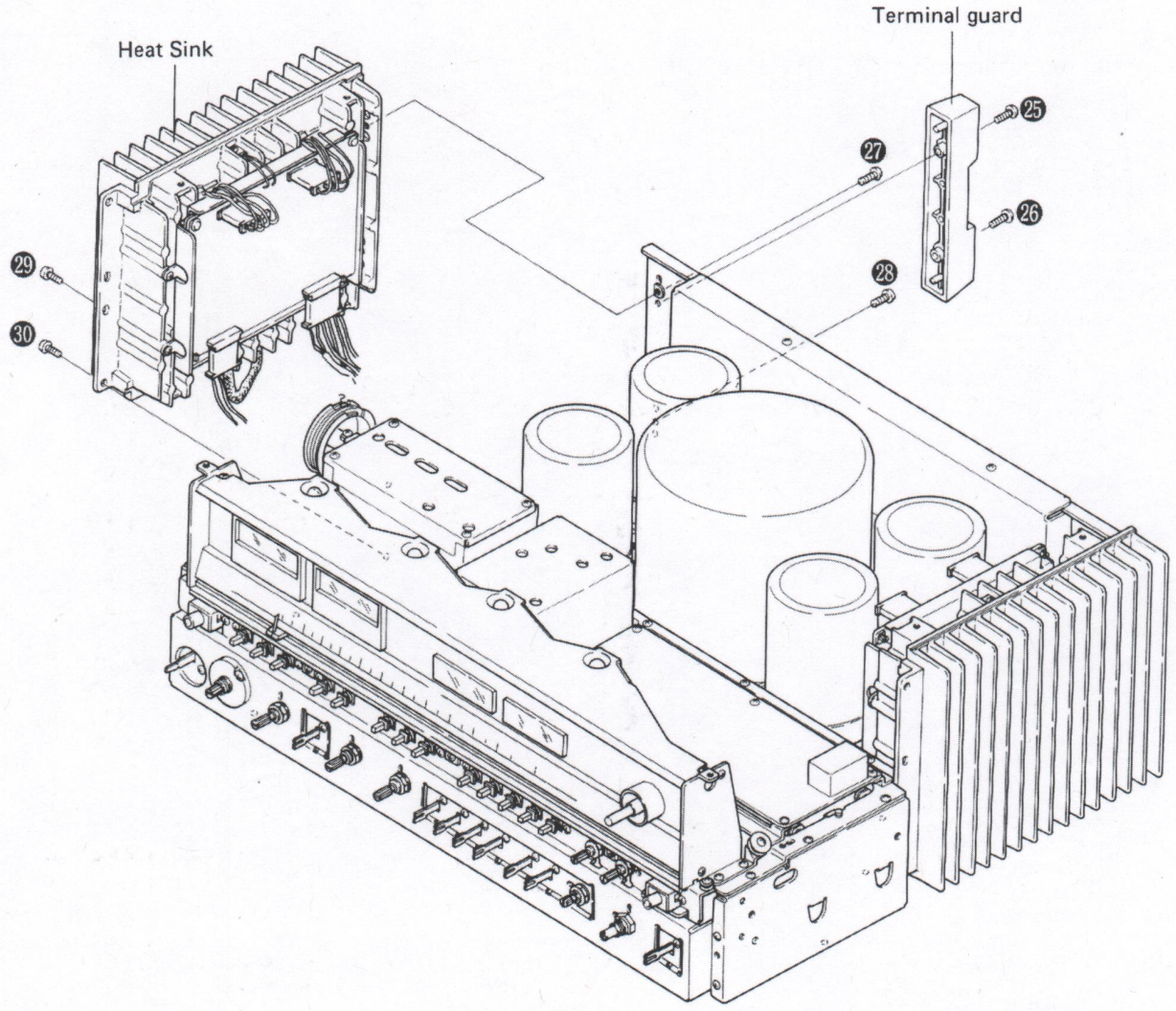

Fig. 7-2

8. PARTS LOCATION

8.1 FRONT PANEL VIEW

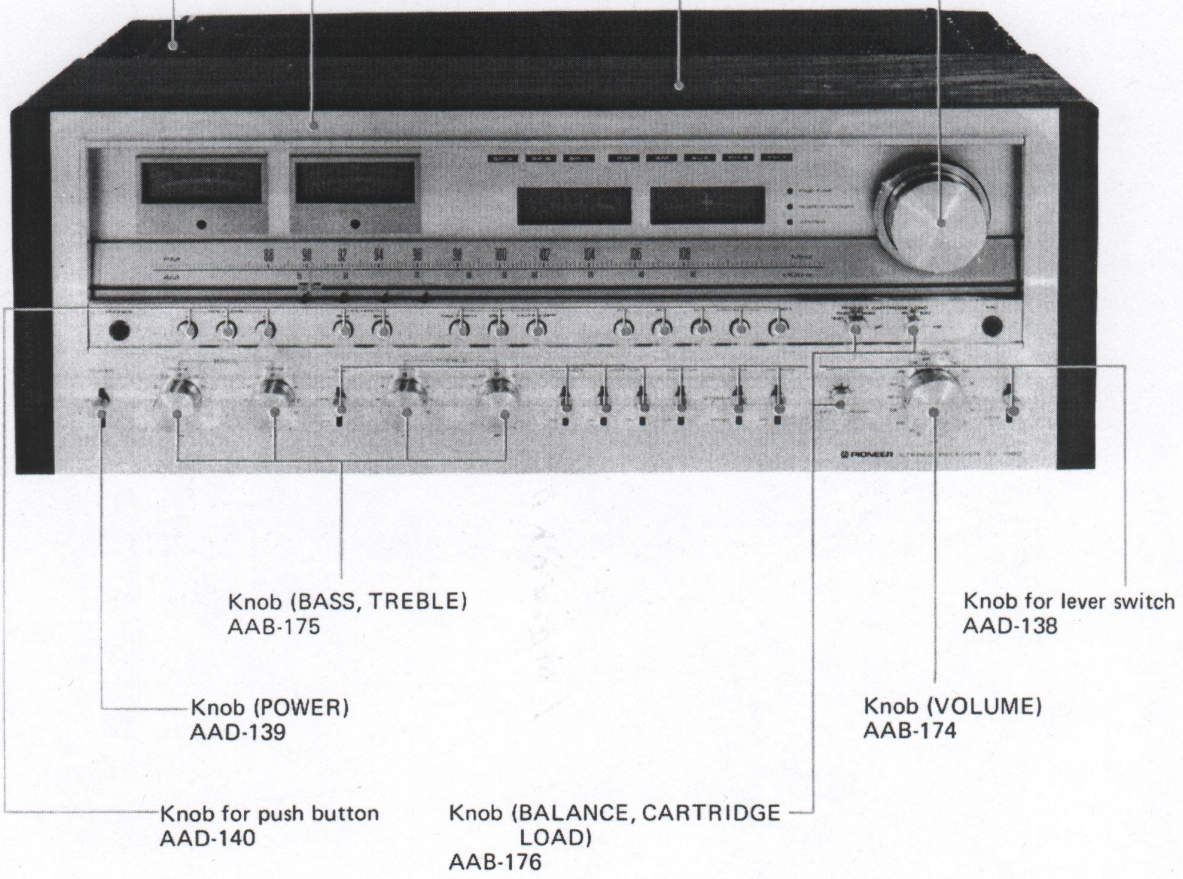

8.2 FRONT VIEW WITH PANEL REMOVED

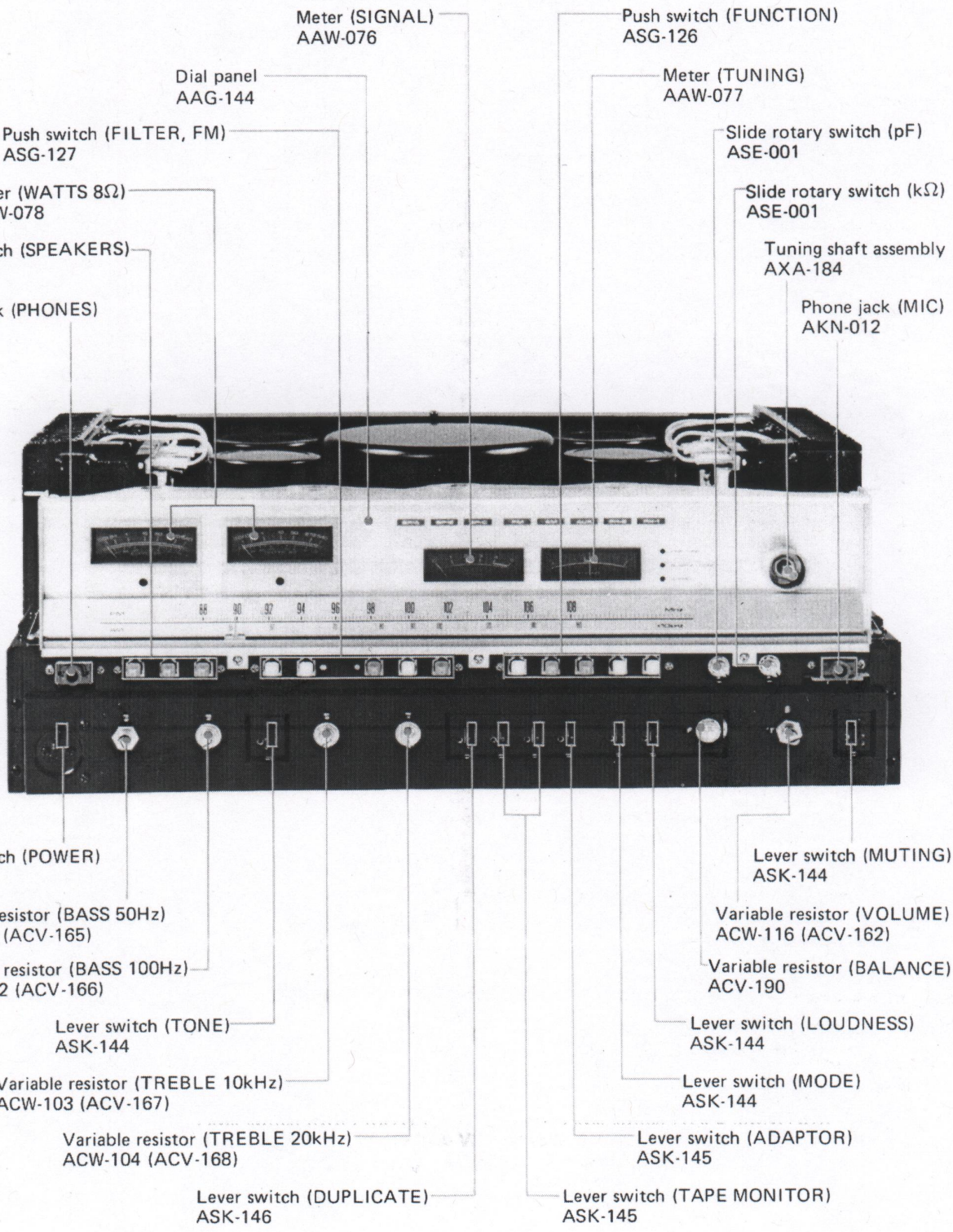

8.3 TOP VIEW

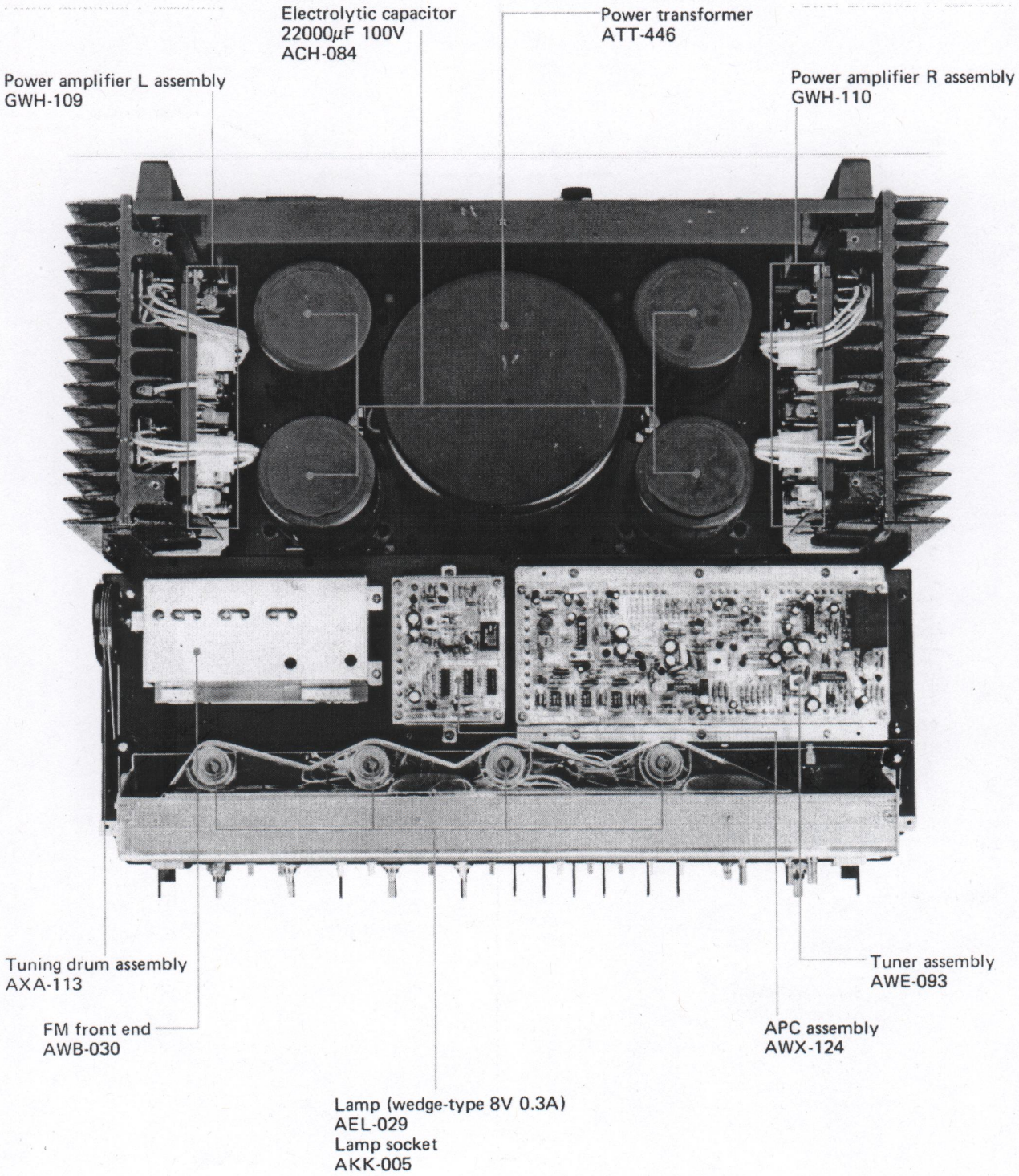
Electrolytic capacitor
22000μF 100V
ACH-084
Power transformer
ATT-446
Power amplifier L assembly
GWH-109
Power amplifier R assembly
GWH-110
Tuning drum assembly
AXA-113
FM front end
AWB-030
Lamp (wedge-type 8V 0.3A)
AEL-029
Lamp socket
AKK-005
APC assembly
AWX-124
Tuner assembly
AWE-093

8.4 BOTTOM VIEW

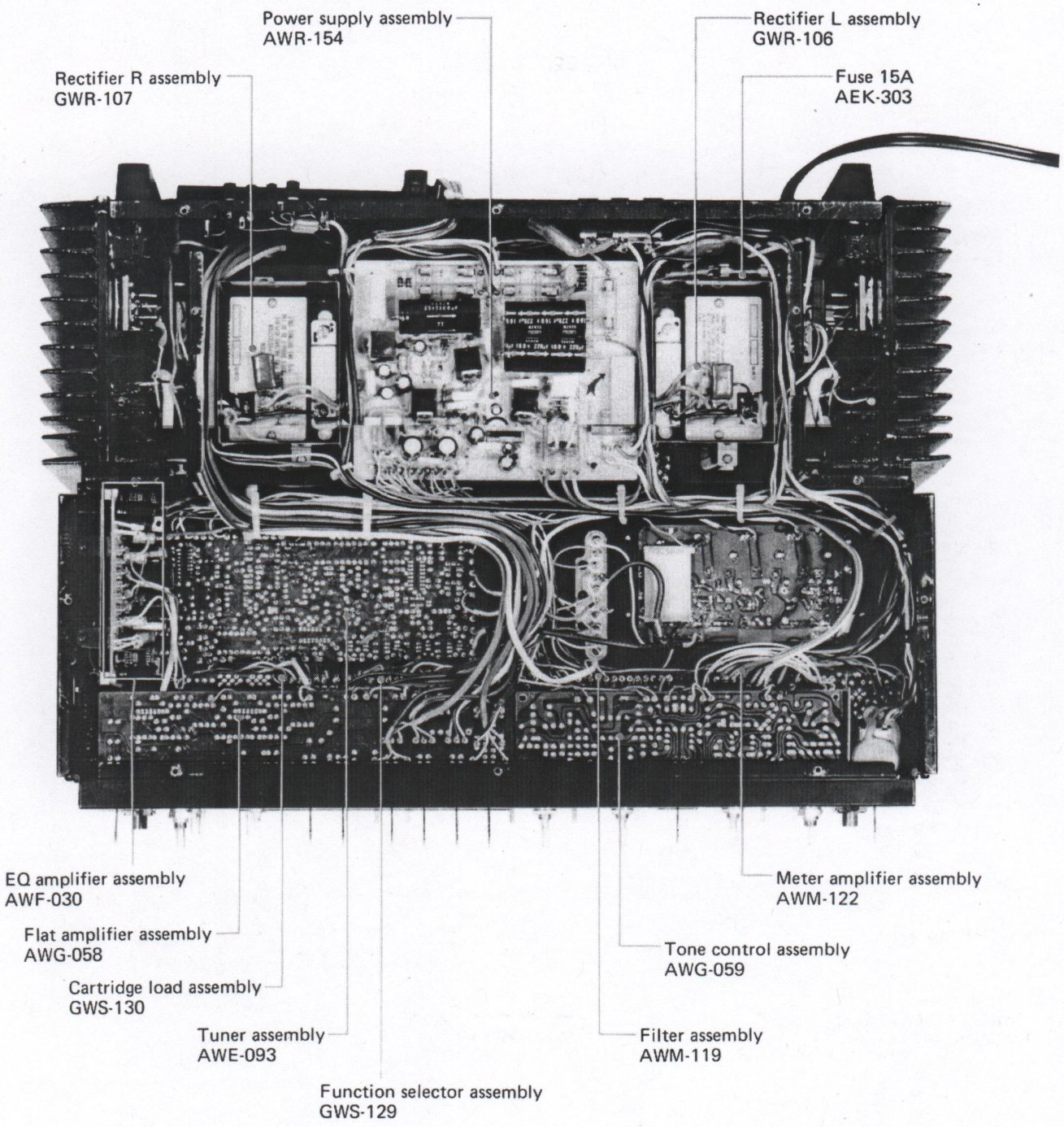

8.5 REAR PANEL VIEW

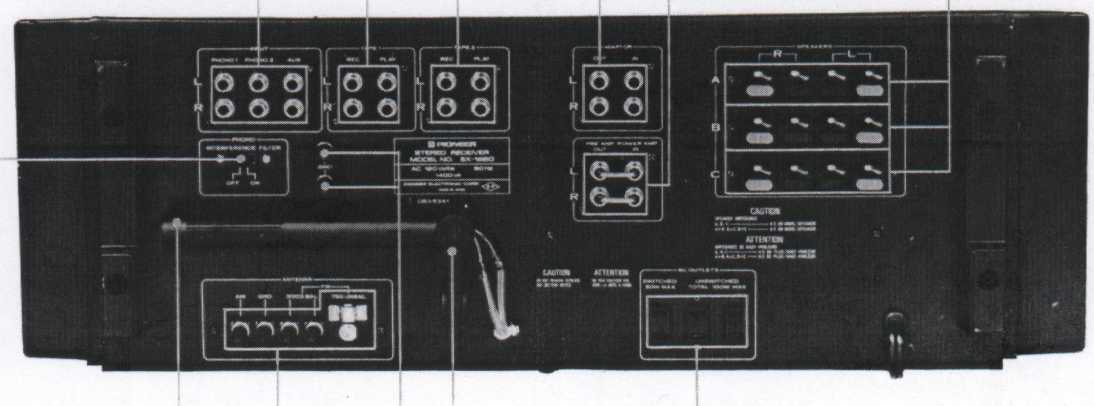

9. DIAL CORD STRINGING

1. Remove the wooden cover and front panel.
2. Undo the 3 screws to remove the blind sash (see Fig. 9-1).
3. Turn the tuning drum around in the clockwise direction (as viewed from the X direction in Fig. 9-4) as far as it will go.
4. Loosen the screw securing the tuning drum, and then remove the drum from the tuning capacitor.
5. Tie one end of the dial cord to the stud located on the inside of the tuning drum, and lead the cord out through the cut-out section.
6. Turn the tuning drum around on the tuning capacitor shaft so that the setscrew faces directly upwards.
7. Pass the dial cord around pulley A, and wind it 3 times around the tuning shaft in a clockwise direction (as viewed from the rear panel).
8. Then pass the dial cord around pulleys B, C and D in order, make 2½ winds around the tuning drum, pull the cord taught, and finally tie it to the spring hook.
9. Turn the TUNING knob back and forth to check that the dial cord moves smoothly and efficiently. Then cut off any excess dial cord remaining.
10. Next turn the TUNING knob in a counter-clockwise direction as far as it will go, and attach the dial pointer to the dial cord so that the pointer reads 87MHz (see Fig. 9-3).
11. Paint-lock the knots on the string.

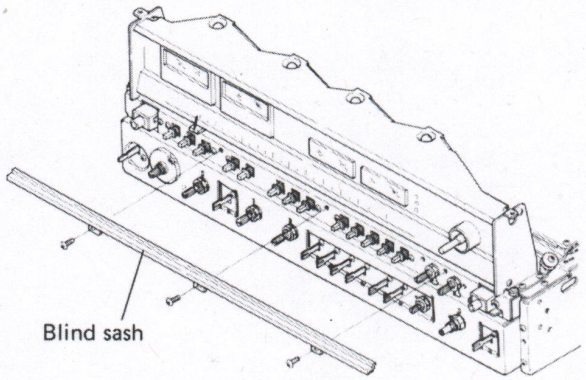

Fig. 9-1

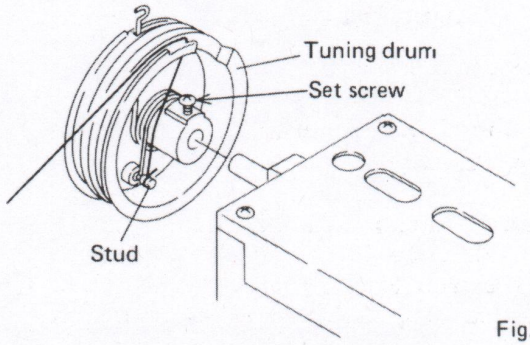

Fig. 9-2

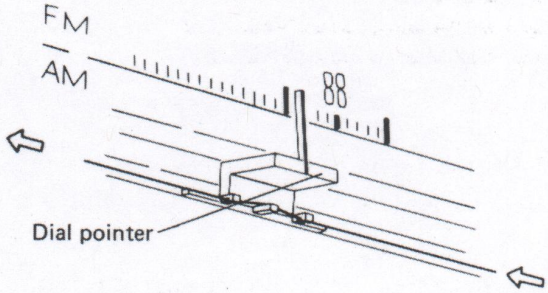

Fig. 9-3

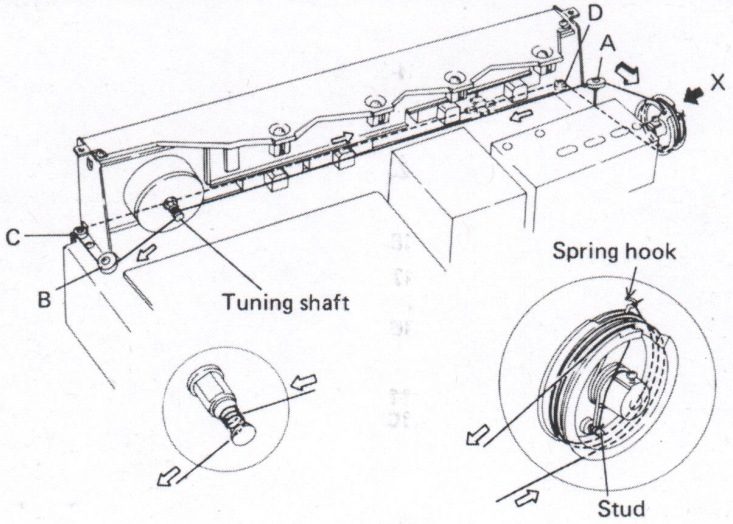

Fig. 9-4

10. ADJUSTMENTS

10.1 POWER AMPLIFIER

Turn VR_3 (L) and VR_4 (R) fully around in the countor-clockwise direction, but set VR_1 (L) and VR_2 (R) to the center positions. Without any load or input signal, turn the POWER switch ON.

10.1.1 DC Balance

Adjust VR_1 (L) and VR_2 (R) so that the potential difference between terminals 17(L) and 32(R) and ground reads zero volts (to within ±3 mV). If this level cannot be attained, disconnect the jumper leads B(L) and D(R) (or reconnect if already disconnected), and then readjust.

10.1.2 Idle Current

Adjust VR_3 (L) and VR_4 (R) so that the potential difference between the plus (+) terminals 24(L) and 25(R), and the minus (−) terminals 10(L) and 39(R) reads 30mV (or at least in the 20 to 40mV range). The potential difference between + terminals 23(L) and 26(R), and − terminals 11(L) and 38(R), and between + terminals 18(L) and 31(R), and − terminals 16(L) and 33(R) should also register about 30mV at this time. After passing a current for about 10 minutes, check these voltage readings again.

10.1.3 Output Power Meter Calibration

Apply a 1kHz signal to the POWER AMP IN terminals (or any other power amplifier input terminals). Adjust the level of this input signal so that the voltage on the output terminals (SPEAKERS) reads 46.48V (AC). Then-adjust VR_2 (L) and VR_1 (R) of the meter amplifier assembly so that the output power meters read 270 watts.

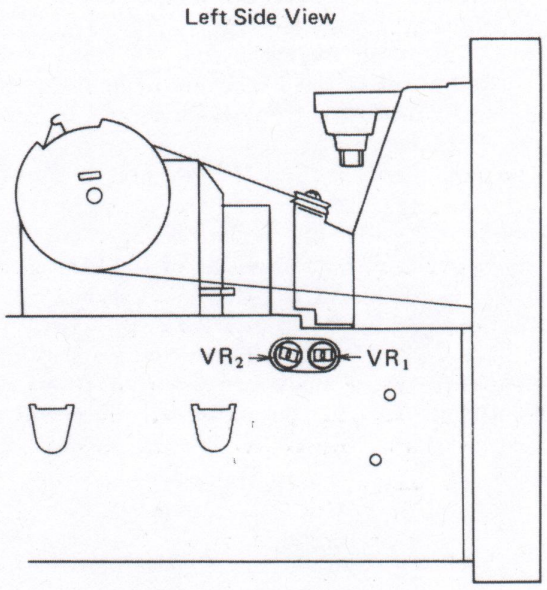

Fig. 10-2 Meter Calibration

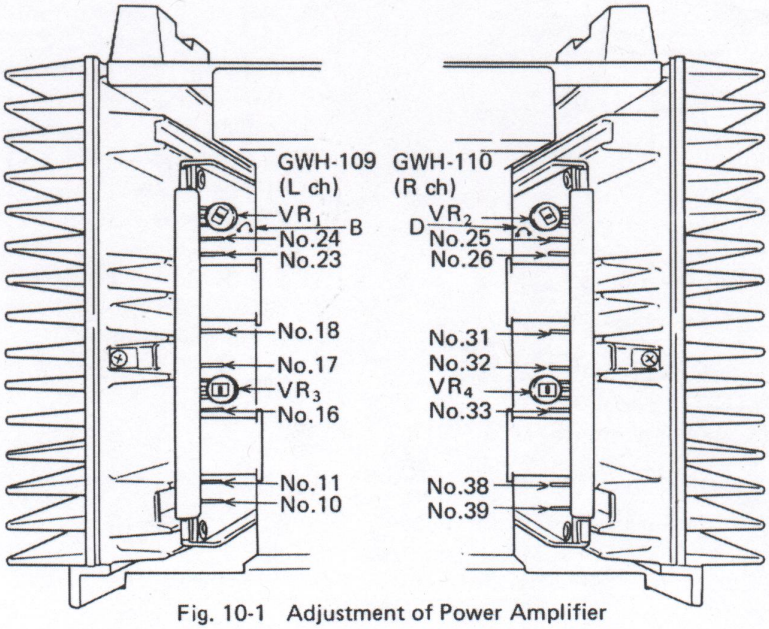

Fig. 10-1 Adjustment of Power Amplifier

10.2 FM TUNER

- Connect terminal 25 to terminal 12 of the tuner assembly via a resistor (of several kΩ to 100kΩ in value). (The hot side of the dial illumination lamp circuit acts as power supply — AC 7.5V). In this condition, the APC PLL circuit will be open, in which case the SX-1980 will operate much the same as a regular receiver.
- It is safer not to perform steps 13 through 18 since there is a danger that the necessary range characteristics will no longer be able to be obtained.
- Adjustments made on the FM front end may well result in the irrecoverable loss of performance. Defective front ends should be replaced altogether.

The tuning coil in the FM front end does not have an adjusting core. Consequently, tracking adjustments at 90 MHz are performed by regulating the gap between rotor and stator of the tuning capacitors (VC_0, VCA, VCR_1, VCR_2, VCR_3).

The expression "adjust VC (VC_0, VCA, VCR_1, VCR_2, VCR_3)" found in the text means that the two outer rotor blades of each of these tuning capacitors are to be extended outwards with spatula (Part No. GGK-066) as shown in Fig. 10-3.

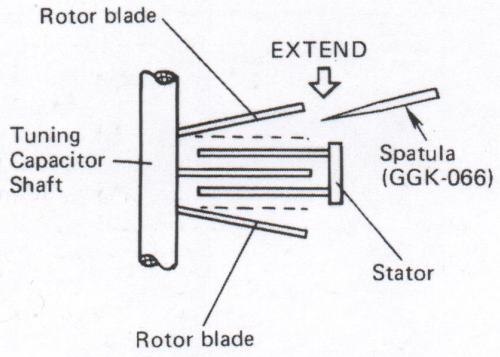

Fig. 10-3 Adjustment of Tuning Capacitor

1. Turn the FM function switch ON.
2. Turn the FM MUTING switch OFF.
3. Connect the FM signal generator (FM SG) to the 300-ohm FM ANTENNA terminals via a 300-ohm dummy load.
4. Connect an AC voltmeter and distortion meter to the L (or R) jacks of TAPE 1 REC.
5. Turn the dial indicator to 98MHz without any input signal.
6. Adjust the lower core of T_1 so that the TUNING meter reads dead center.
7. Adjust the FM SG output to 66dB, 400Hz ±75kHz deviation (100% modulation).
8. Set the tuning dial indicator and FM SG frequency to 90MHz.
9. Adjust the FM front end VC_0 so that the SIGNAL meter gives maximum deflection, and the TUNING meter reads dead center.
10. Reset the tuning dial indicator and FM SG frequency to 108MHz.
11. Adjust the FM front end TC_0 so that the SIGNAL meter gives maximum deflection, and the TUNING meter dead center.
12. Repeat steps 8 to 11 above until there is no further change in either meter.
13. Set the FM SG output to 20dB.
14. Set the tuning dial indicator and FM SG frequency to 90MHz.
15. Adjust FM front end VCA, VCR_1, VCR_2 and VCR_3 so that the SIGNAL meter gives maximum deflection.
16. Set the tuning dial indicator and FM SG frequency to 108MHz.
17. Adjust FM front end TCA, TCR_1, TCR_2 and TCR_3 so that the SIGNAL meter gives maximum deflection.
18. Repeat steps 14 to 17 above until there is no further change in either meter.
19. Set the FM SG frequency to 98MHz.
20. Adjust so that the SIGNAL meter gives maximum deflection, and the TUNING meter reads dead center.
21. Set the FM SG output to 66dB.
22. Adjust T_1 upper core to reduce distortion in the AF output (REC jack) to a minimum.
23. Turn the FM SG output right down to eliminate the input signal.
24. Adjust the T_1 lower core so that the TUNING meter reads dead center.
25. Repeat steps 21 to 24 above so that the TUNING meter reads dead center with a minimum of distortion.
26. Set the FM SG output to 106dB.
27. Check that the voltage on terminal 37 of the tuner assembly is 0V.

28. Adjust VR_1 so that the SIGNAL meter reads 4.8 (80% of the distance between 4 and 5 on the scale).
29. Turn the FM MUTING switch ON, and set the FMSG output to 26dB.
30. Adjust VR_2 to bring the input level to the starting point of the muting operation

Multiplex Decoder

31. Connect the multiplex signal generator (MPX SG) to the external modulator terminals of FM SG, thereby using FM SG as external modulation.
32. Connect the MPX SG pilot output terminal (19kHz) to the horizontal input terminal of an oscilloscope.

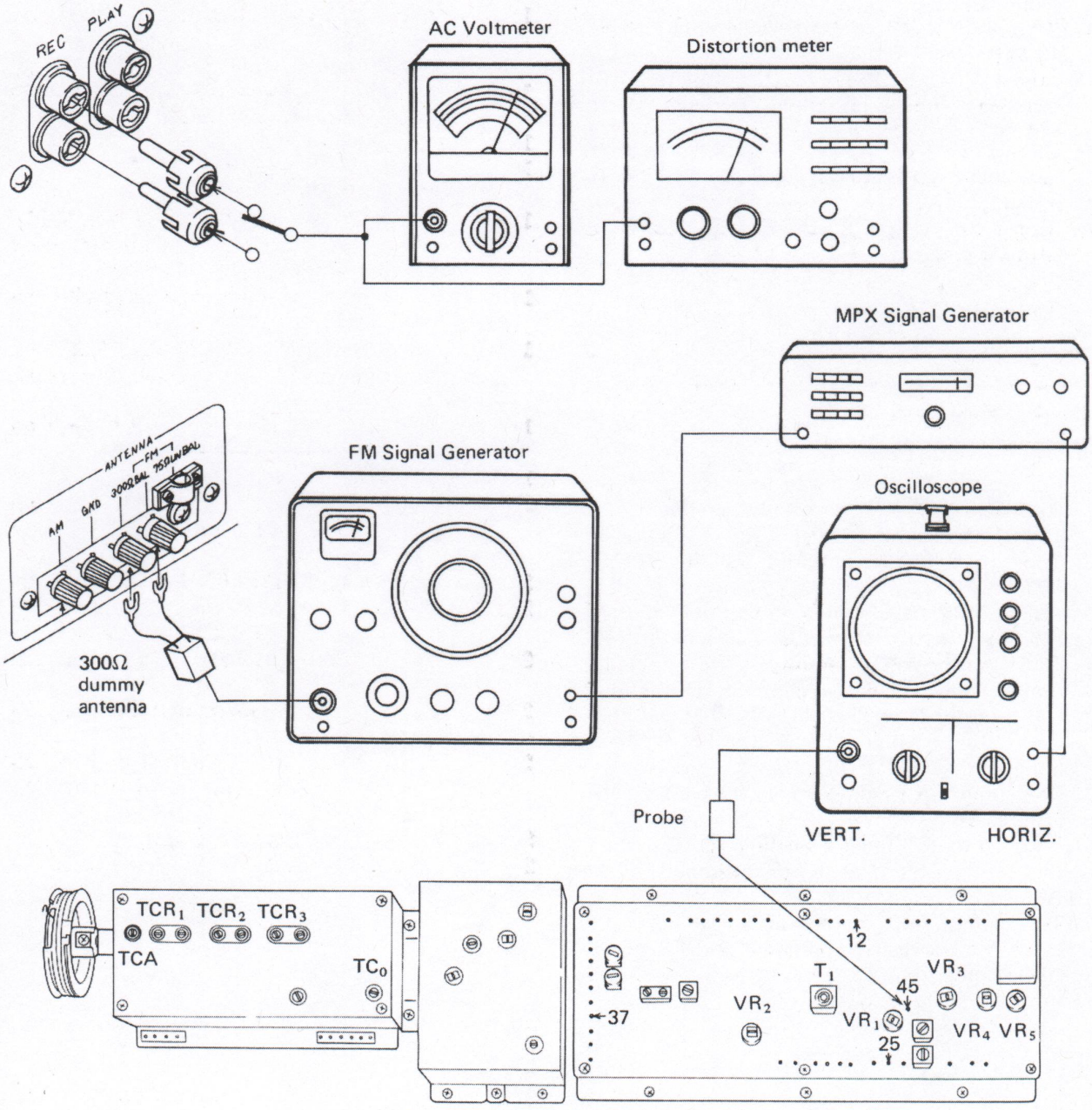

Fig. 10-4 Connection Diagram

33. Then connect terminal 45 of the tuner assembly to the vertical input terminal of the oscilloscope with a probe (10:1).
34. Set the FM SG output to 98MHz, 66dB, unmodulated.
35. Tune the receiver to check that the SIGNAL meter gives maximum deflection, and the TUNING meter reads dead center.
36. Adjust VR_3 so that a stationary Lissajous' figure (see Fig. 10-5) appears on the oscilloscope screen.
37. Set the MPX SG to pilot signal only (19kHz, ±7.5kHz deviation).
38. Adjust VR_4 so that the AC voltmeter (REC terminal) shows minimum reading (19kHz leak).
39. Set the MPX SG to 1kHz (L or R) ±67.5kHz deviation, and 19kHz (pilot signal) ±7.5kHz deviation.
40. Adjust VR_5 to reduce crosstalk between L and R to a minimum.

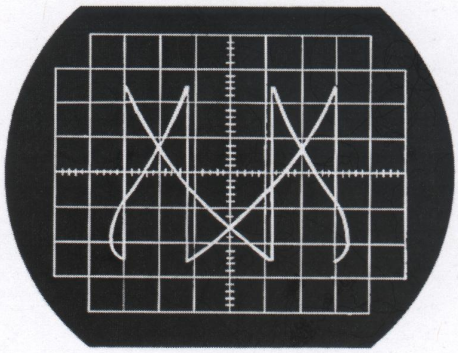

Fig. 10-5 Lissajous' Figure

10.3 APC ADJUSTMENTS

1. Connect an oscilloscope to terminal 12 of the APC assembly, and check the presence of a 100kHz square wave signal at the output.
2. Tune to a frequency close to (but not at) 90MHz.
3. Adjust VR_3 to obtain a voltage of DC 6.0V (±0.05V) across terminals 11 and 9 (+B, 13.5V) of the APC assembly.
4. Connect the oscilloscope across terminals 8 and 7 (ground) of the APC assembly, and then adjust L_2 to obtain the waveform of maximum size.
5. Next tune to a frequency near (but not exactly at) 98MHz.
6. Adjust VR_1 to obtain a reading of AC 450mV rms between terminals 8 and 7 (ground) of the APC assembly.
7. Then adjust VR_2 to obtain a reading of 0V (±0.01V) between terminals 8 and 13 of the APC assembly.

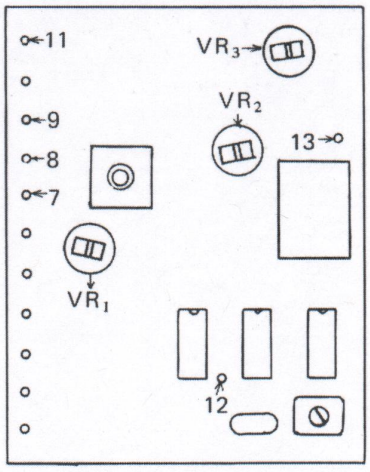

Fig. 10-6 APC Adjustment

10.4 AM TUNER

1. Connect the AM signal generator (AMSG) to the AM ANTENNA terminal via a 1kΩ resistor.
2. Turn the AM function switch ON.
3. Turn the DUPLICATE switch OFF, and connect an AC voltmeter to either the L or R TAPE 1 REC jack.
4. Apply a 400Hz, 30% modulated signal to AMSG, and set the output to 100dB.
5. Adjust the tuning dial indicator and AMSG frequency to 600kHz.
6. Adjust the T_2 core to provide maximum reading in the AC voltmeter.
7. Next readjust the tuning dial indicator and AMSG frequency to 1400kHz.
8. Adjust AM_3 (trimmer) to again provide maximum reading in the AC voltmeter.
9. Set AMSG to 30dB output level.
10. Return the tuning dial indicator and AMSG frequency to 600kHz.
11. This time adjust T_2, T_3, and the bar antenna core to provide maximum reading in the AC voltmeter.
12. Return the tuning dial indicator and AMSG frequency back to 1400kHz.
13. Adjust AM_3, AM_2 and AM_1 (trimmers) to again provide maximum reading in the AC voltmeter.
14. Repeat steps 10 to 13 above until no further changes occur in the AC voltage readings at the 600kHz and 1400kHz positions.

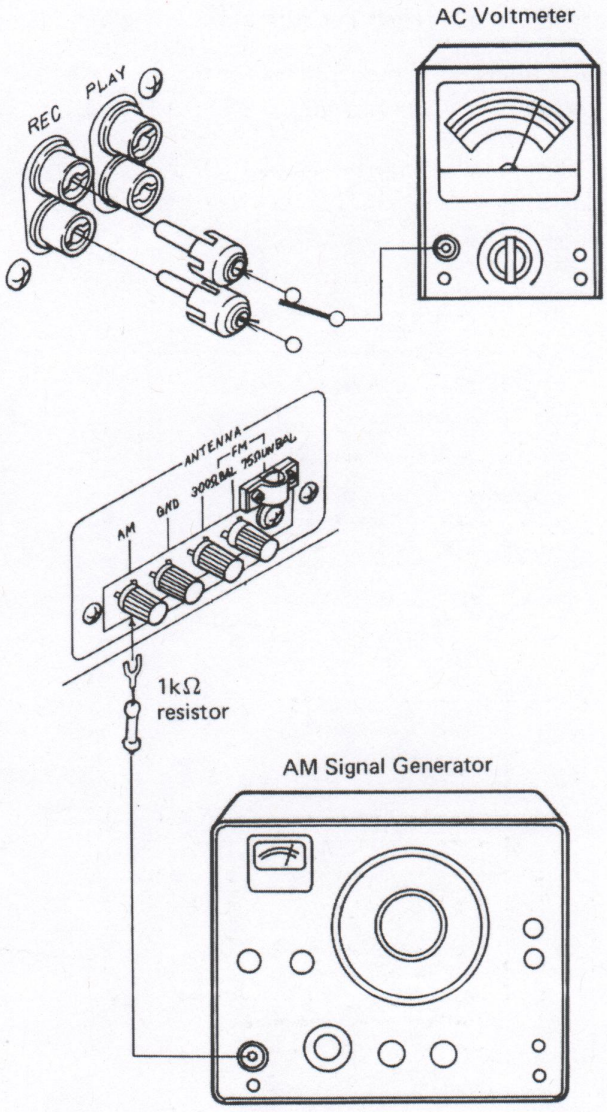

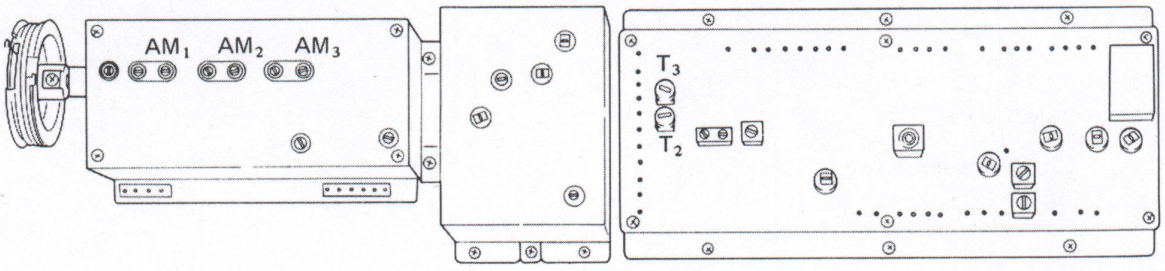

Fig. 10-7

11. EXPLODED VIEW

NOMENCLATURE OF SCREWS, WASHERS AND NUTS

The following symbols stand for screws, washers and nuts as shown in exploded view.

Symbol	Description	Shape
RT	Brazier head tapping screw	
PT	Pan head tapping screw	
BT	Binding head tapping screw	
CT	Countersunk head tapping screw	
TT	Truss head tapping screw	
OCT	Oval countersunk head tapping screw	
PM	Pan head machine screw	
CM	Countersunk head machine screw	
OCM	Oval countersunk head machine screw	
TM	Truss head machine screw	
BM	Binding head machine screw	
PSA	Pan head screw with spring lock washer	
PSB	Pan head screw with spring lock washer and flat washer	
PSF	Pan head screw with flat washer	

Symbol	Description	Shape
EW	E type washer	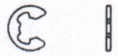
FW	Flat washer	
SW	Spring lock washer	
N	Nut	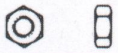
WN	Washer faced nut	
ITW	Internal toothed lock washer	
OTW	Outernal toothed lock washer	
SC	Slotted set screw (Cone point)	
SF	Slotted set screw (Flat point)	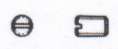
HS	Hexagon socket headless set screw	
OCW	Oval countersunk head wood screw	
CW	Countersunk head wood screw	
RW	Round head wood screw	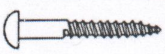

EXAMPLE

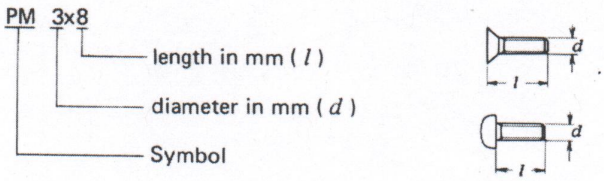

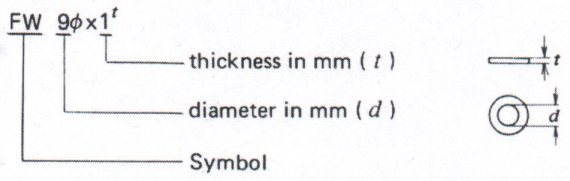

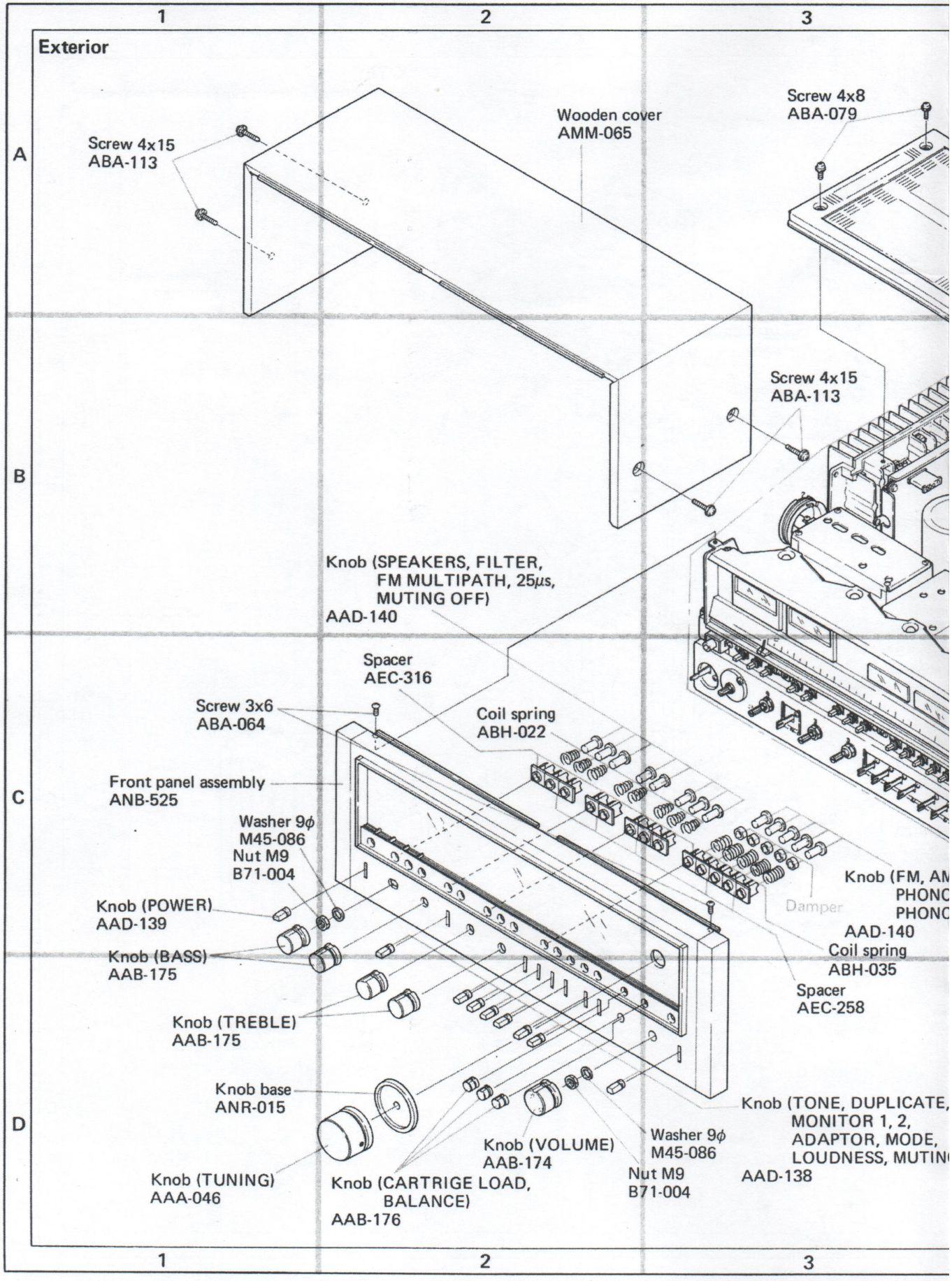
Exterior
Screw 4x15
ABA-113
Wooden cover
AMM-065
Screw 4x8
ABA-079
Screw 4x15
ABA-113
Knob (SPEAKERS, FILTER,
FM MULTIPATH, 25μs,
MUTING OFF)
AAD-140
Spacer
AEC-316
Screw 3x6
ABA-064
Coil spring
ABH-022
Front panel assembly
ANB-525
Washer 9φ
M45-086
Nut M9
B71-004
Knob (POWER)
AAD-139
Knob (BASS)
AAB-175
Knob (TREBLE)
AAB-175
Knob base
ANR-015
Knob (TUNING)
AAA-046
Knob (CARTRIGE LOAD,
BALANCE)
AAB-176
Knob (VOLUME)
AAB-174
Washer 9φ
M45-086
Nut M9
B71-004
Damper
Knob (FM, AM
PHONO
PHONO
AAD-140
Coil spring
ABH-035
Spacer
AEC-258
Knob (TONE, DUPLICATE,
MONITOR 1, 2,
ADAPTOR, MODE,
LOUDNESS, MUTIN
AAD-138
1
2
3
A
B
C
D

NOTE:
Parts indicated in green type cannot be supplied.

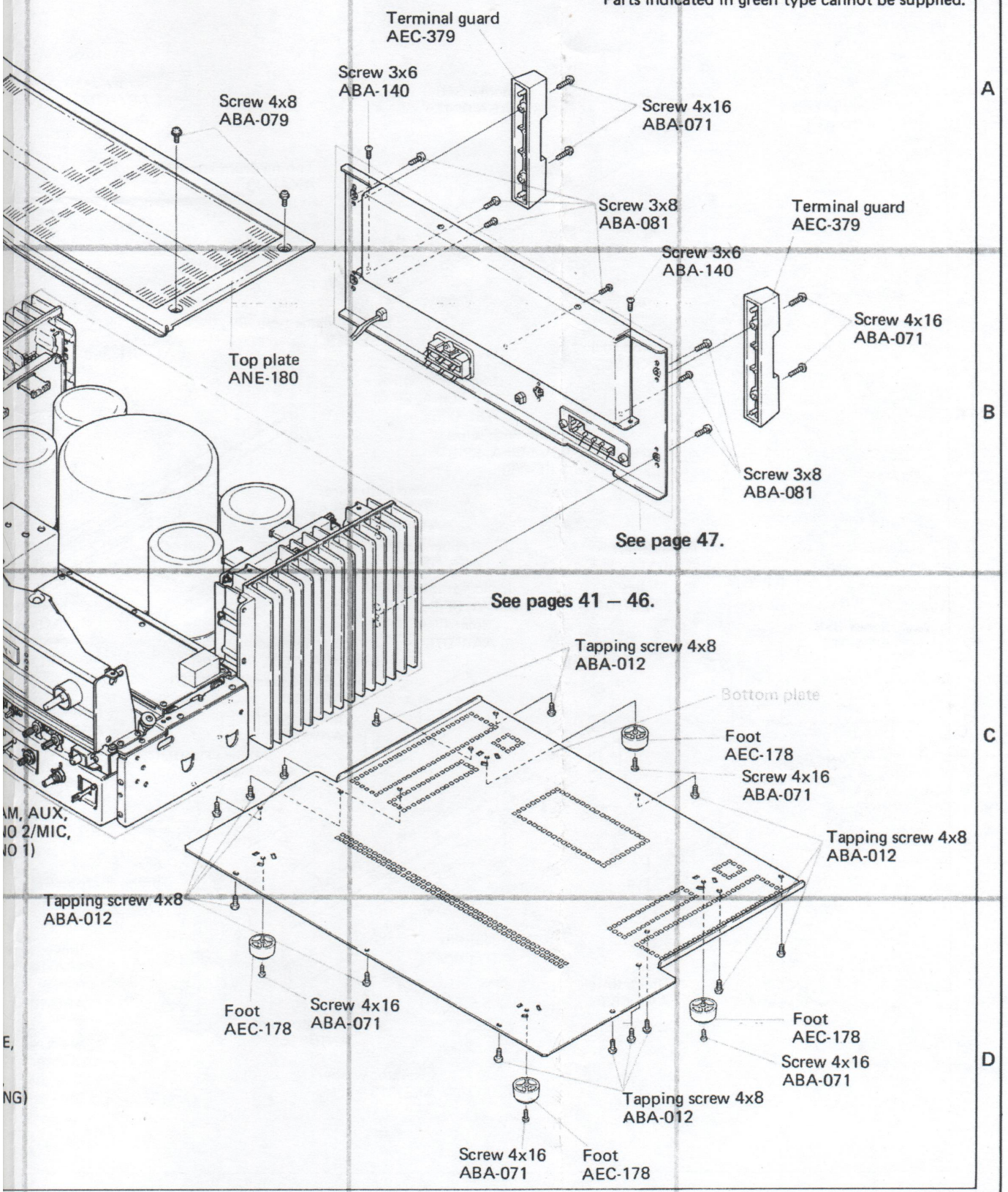

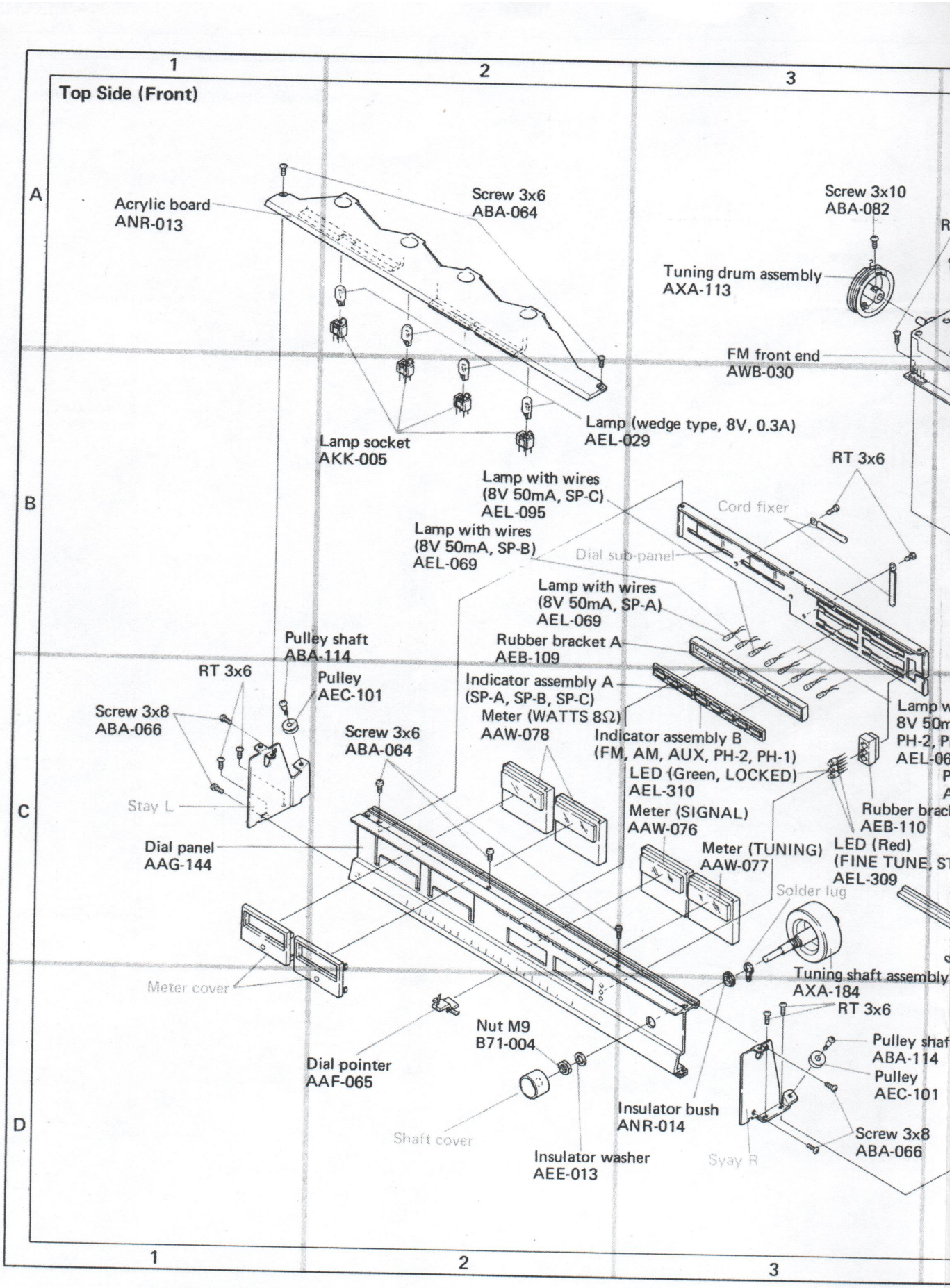
Top Side (Front)
1
2
3
A
B
C
D
Acrylic board
ANR-013
Screw 3x6
ABA-064
Screw 3x10
ABA-082
Tuning drum assembly
AXA-113
FM front end
AWB-030
Lamp (wedge type, 8V, 0.3A)
AEL-029
Lamp socket
AKK-005
RT 3x6
Lamp with wires
(8V 50mA, SP-C)
AEL-095
Cord fixer
Lamp with wires
(8V 50mA, SP-B)
AEL-069
Dial sub-panel
Lamp with wires
(8V 50mA, SP-A)
AEL-069
Pulley shaft
ABA-114
Rubber bracket A
AEB-109
RT 3x6
Pulley
AEC-101
Indicator assembly A
(SP-A, SP-B, SP-C)
Meter (WATTS 8Ω)
AAW-078
Screw 3x8
ABA-066
Screw 3x6
ABA-064
Indicator assembly B
(FM, AM, AUX, PH-2, PH-1)
LED (Green, LOCKED)
AEL-310
Stay L
Meter (SIGNAL)
AAW-076
Rubber brac
AEB-110
Dial panel
AAG-144
Meter (TUNING)
AAW-077
LED (Red)
(FINE TUNE, S
AEL-309
Solder lug
Meter cover
Tuning shaft assembly
AXA-184
RT 3x6
Nut M9
B71-004
Pulley shaf
ABA-114
Pulley
AEC-101
Dial pointer
AAF-065
Insulator bush
ANR-014
Screw 3x8
ABA-066
Shaft cover
Insulator washer
AEE-013
Sway R

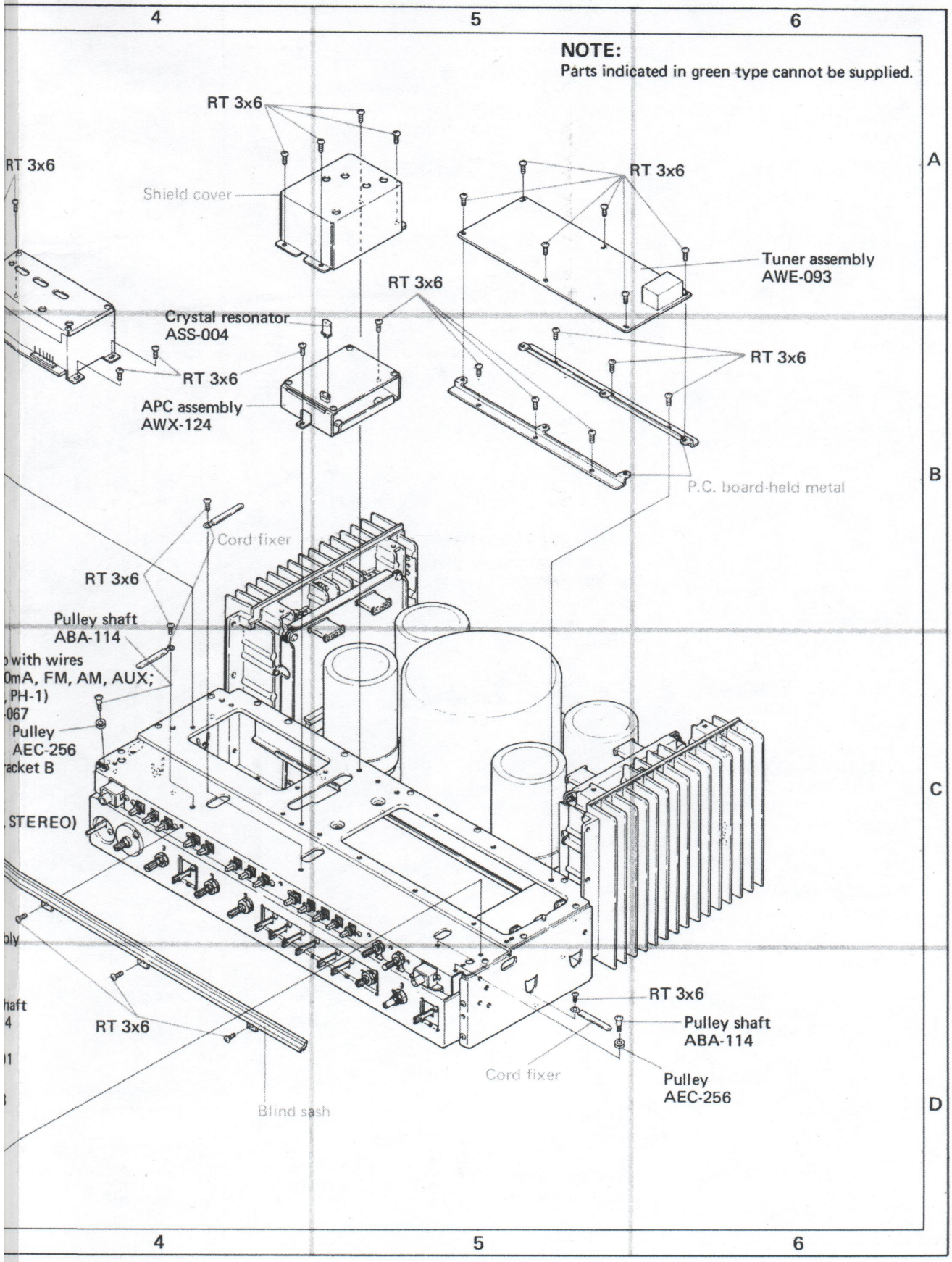
4
5
6
NOTE:
Parts indicated in green type cannot be supplied.
RT 3x6
Shield cover
RT 3x6
Tuner assembly
AWE-093
RT 3x6
Crystal resonator
ASS-004
RT 3x6
RT 3x6
APC assembly
AWX-124
P.C. board-held metal
Cord fixer
RT 3x6
Pulley shaft
ABA-114
with wires
0mA, FM, AM, AUX;
PH-1)
067
Pulley
AEC-256
racket B
STEREO)
RT 3x6
RT 3x6
Pulley shaft
ABA-114
Cord fixer
Pulley
AEC-256
Blind sash
A
B
C
D
4
5
6

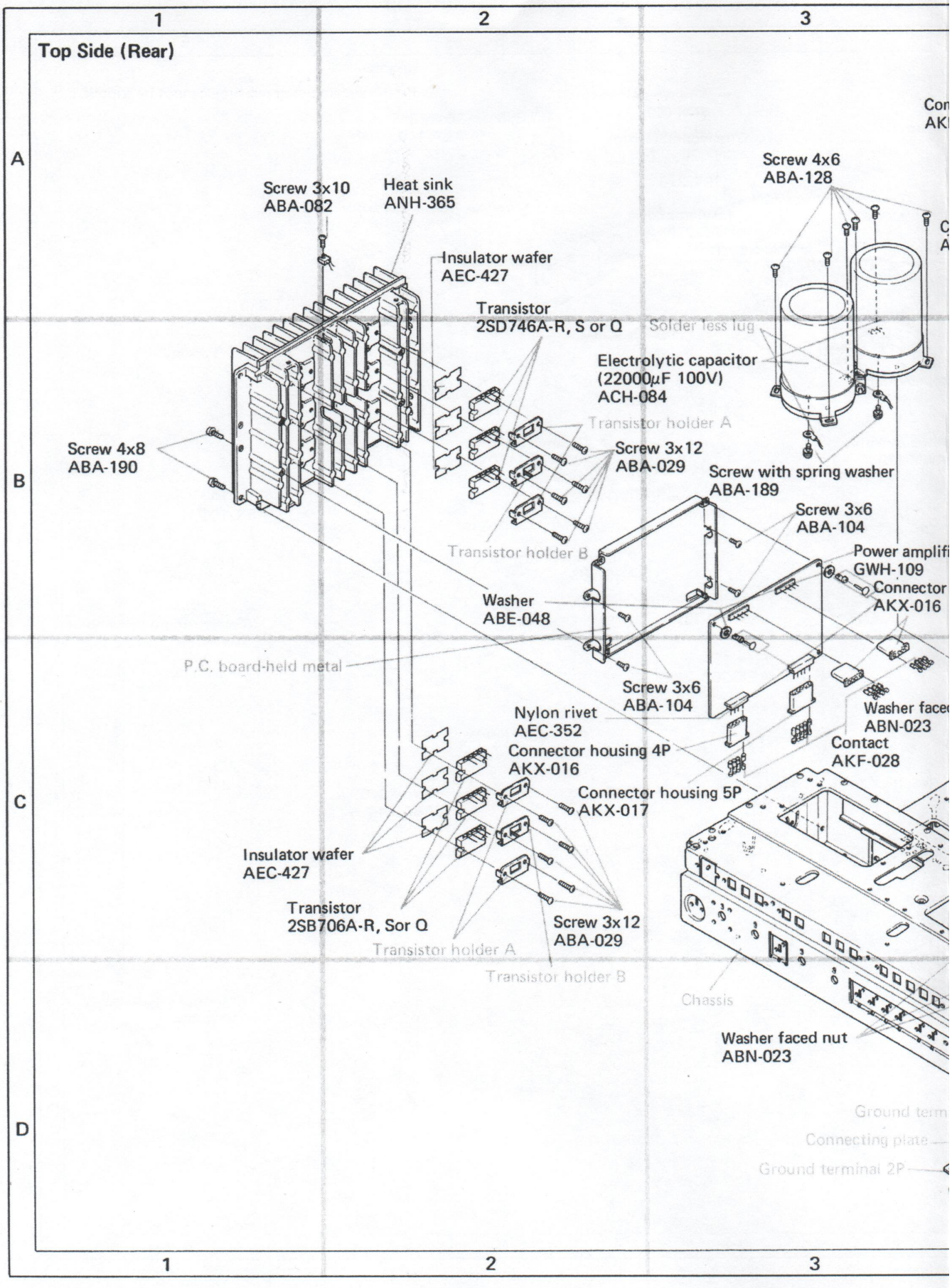
Top Side (Rear)
1
2
3
A
B
C
D
Screw 3x10
ABA-082
Heat sink
ANH-365
Insulator wafer
AEC-427
Transistor
2SD746A-R, S or Q
Transistor holder A
Screw 4x8
ABA-190
Screw 3x12
ABA-029
Transistor holder B
Screw 4x6
ABA-128
Solder less lug
Electrolytic capacitor
(22000μF 100V)
ACH-084
Screw with spring washer
ABA-189
Screw 3x6
ABA-104
Power amplifi
GWH-109
Connector
AKX-016
Washer
ABE-048
P.C. board-held metal
Screw 3x6
ABA-104
Nylon rivet
AEC-352
Connector housing 4P
AKX-016
Connector housing 5P
AKX-017
Contact
AKF-028
Washer face
ABN-023
Insulator wafer
AEC-427
Transistor
2SB706A-R, Sor Q
Transistor holder A
Transistor holder B
Screw 3x12
ABA-029
Chassis
Washer faced nut
ABN-023
Ground term
Connecting plate
Ground terminal 2P

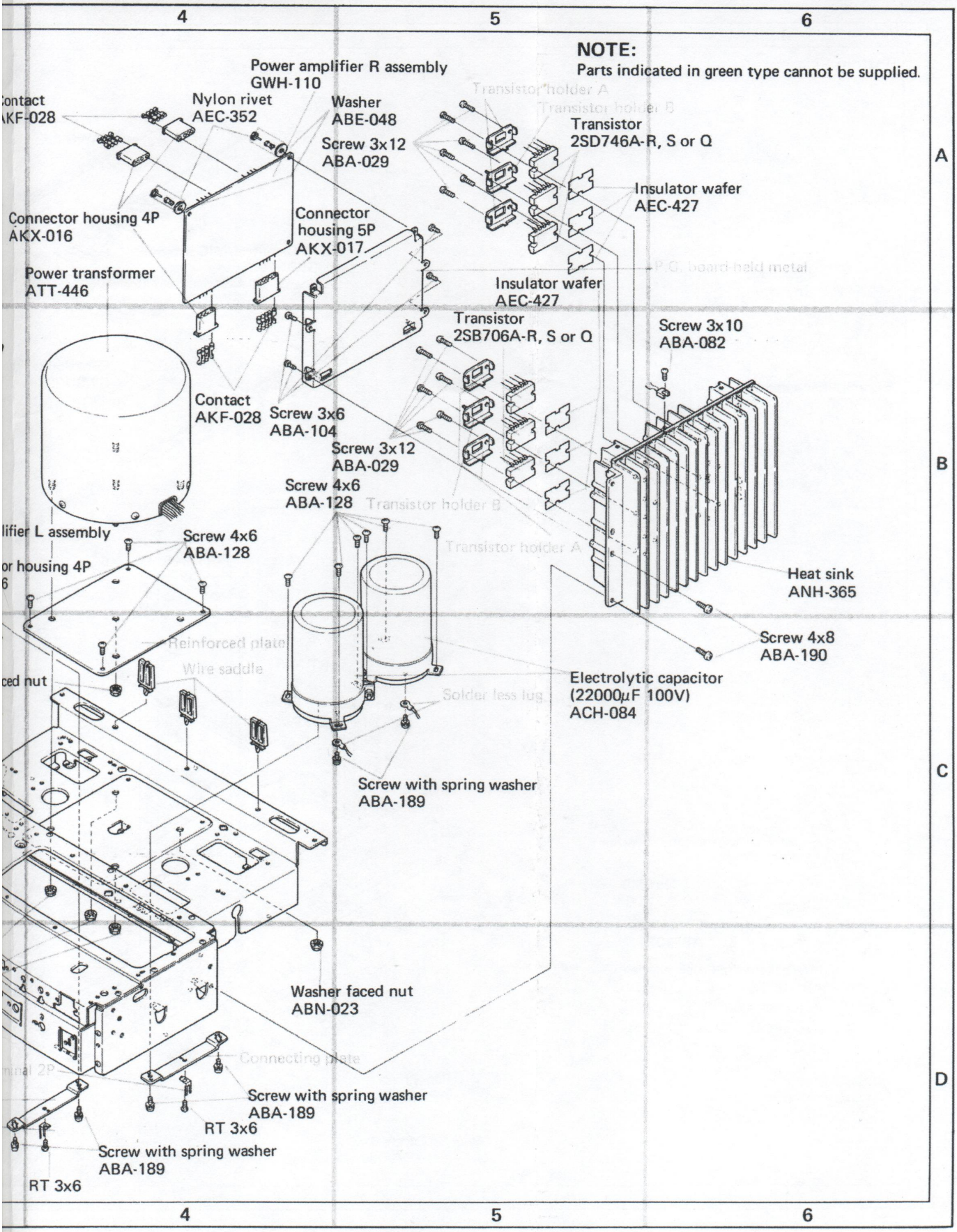
4
5
6
A
B
C
D
NOTE:
Parts indicated in green type cannot be supplied.
Power amplifier R assembly
GWH-110
Nylon rivet
AEC-352
Washer
ABE-048
Screw 3x12
ABA-029
Transistor
2SD746A-R, S or Q
Insulator wafer
AEC-427
Connector housing 4P
AKX-016
Connector housing 5P
AKX-017
Power transformer
ATT-446
Insulator wafer
AEC-427
Transistor
2SB706A-R, S or Q
Screw 3x10
ABA-082
Contact
AKF-028
Screw 3x6
ABA-104
Screw 3x12
ABA-029
Screw 4x6
ABA-128
Screw 4x6
ABA-128
Heat sink
ANH-365
Screw 4x8
ABA-190
Electrolytic capacitor
(22000μF 100V)
ACH-084
Screw with spring washer
ABA-189
Washer faced nut
ABN-023
Screw with spring washer
ABA-189
RT 3x6
Screw with spring washer
ABA-189
RT 3x6

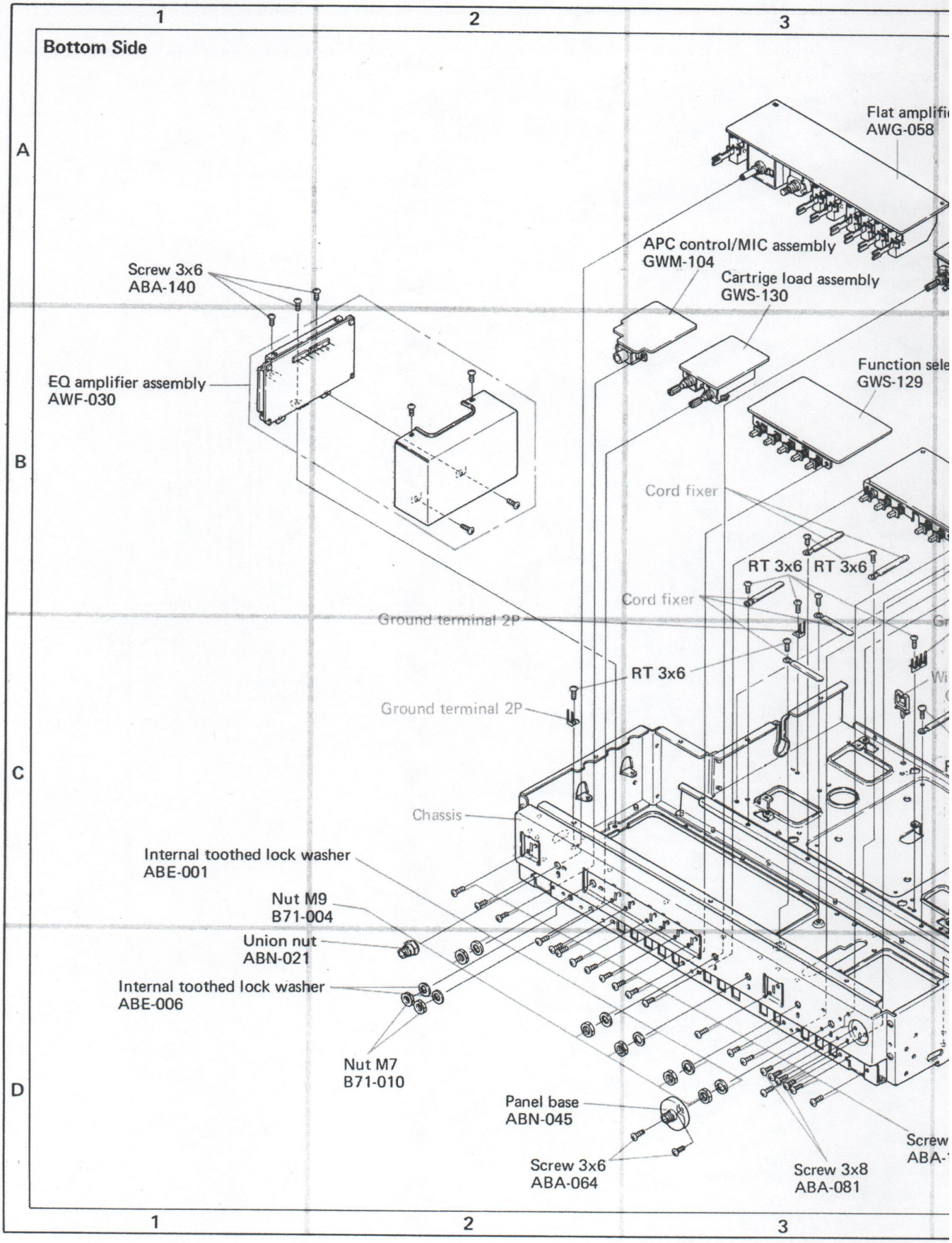
Bottom Side
1
2
3
A
B
C
D
Flat amplifi
AWG-058
APC control/MIC assembly
GWM-104
Cartrige load assembly
GWS-130
Function sele
GWS-129
Screw 3x6
ABA-140
EQ amplifier assembly
AWF-030
Cord fixer
RT 3x6
RT 3x6
Cord fixer
Ground terminal 2P
RT 3x6
Ground terminal 2P
Chassis
Internal toothed lock washer
ABE-001
Nut M9
B71-004
Union nut
ABN-021
Internal toothed lock washer
ABE-006
Nut M7
B71-010
Panel base
ABN-045
Screw 3x6
ABA-064
Screw 3x8
ABA-081
Screw
ABA-

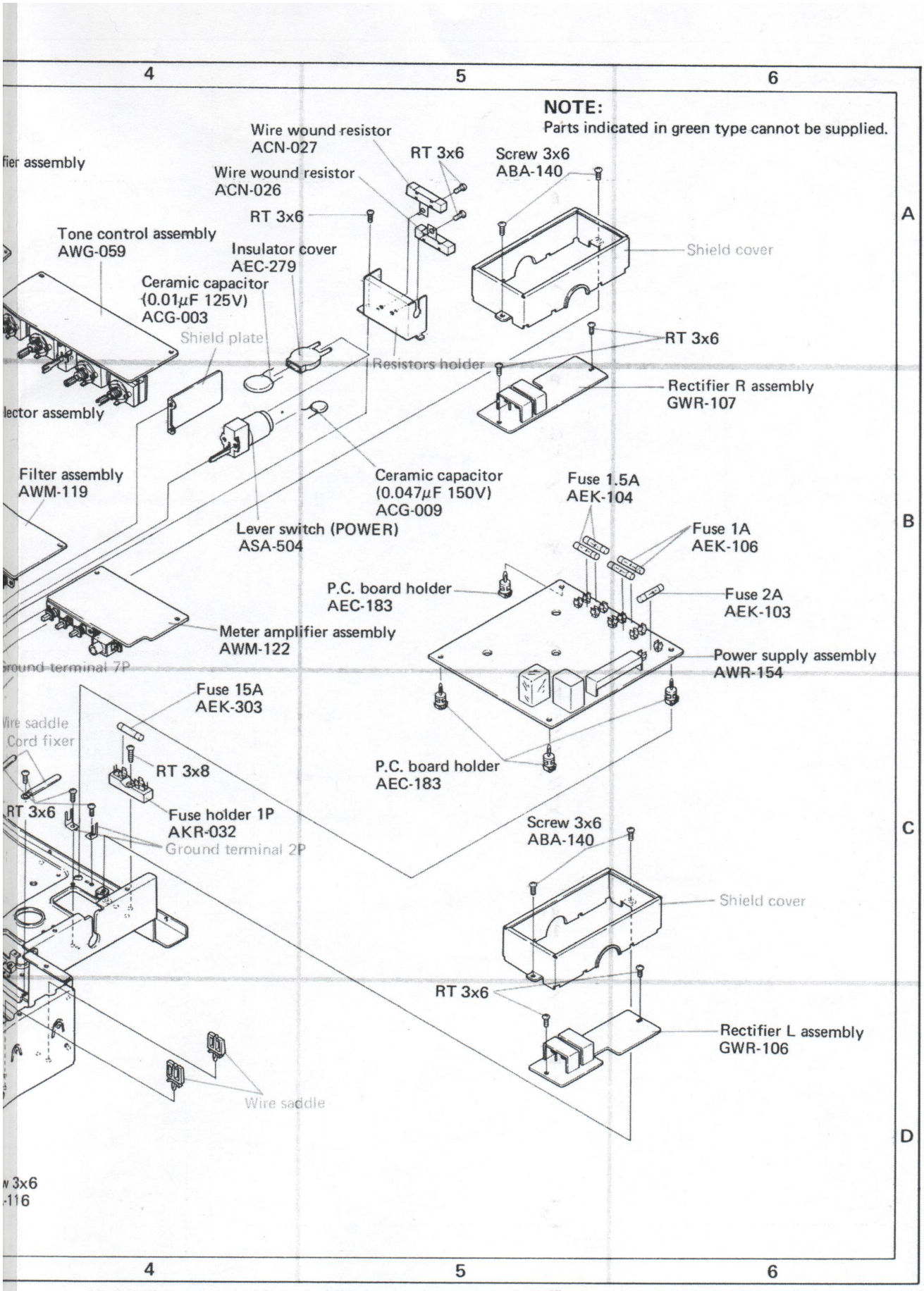
4
5
6
NOTE:
Parts indicated in green type cannot be supplied.
Wire wound resistor
ACN-027
RT 3x6
Screw 3x6
ABA-140
Wire wound resistor
ACN-026
RT 3x6
Tone control assembly
AWG-059
Insulator cover
AEC-279
Shield cover
Ceramic capacitor
(0.01μF 125V)
ACG-003
Shield plate
RT 3x6
Resistors holder
Rectifier R assembly
GWR-107
Filter assembly
AWM-119
Ceramic capacitor
(0.047μF 150V)
ACG-009
Fuse 1.5A
AEK-104
Lever switch (POWER)
ASA-504
Fuse 1A
AEK-106
P.C. board holder
AEC-183
Fuse 2A
AEK-103
Meter amplifier assembly
AWM-122
Power supply assembly
AWR-154
Fuse 15A
AEK-303
RT 3x8
P.C. board holder
AEC-183
RT 3x6
Fuse holder 1P
AKR-032
Ground terminal 2P
Screw 3x6
ABA-140
Shield cover
RT 3x6
Rectifier L assembly
GWR-106
Wire saddle
A
B
C
D

Rear Panel Component

NOTE:
Parts indicated in green type cannot be supplied.

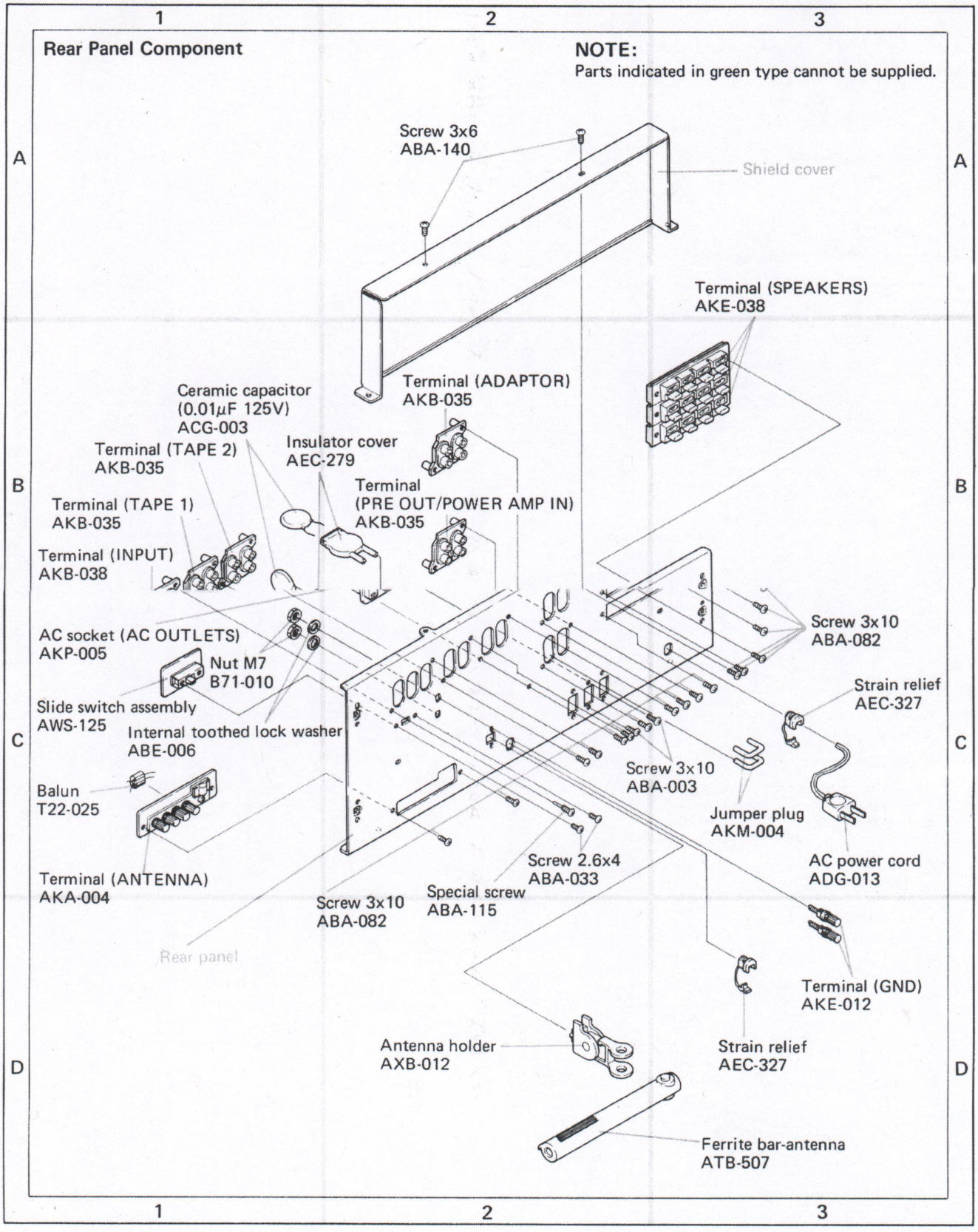

12. SCHEMATIC DIAGRAMS, P.C. BOARD PATTERNS AND PARTS LIST

12.1 MISCELLANEA

External Appearance of Transistors and ICs

2SC945A
2SA872A
2SC1775A
2SA733
2SC1438
2SC1318
2SA720

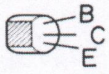

2SC763
2SC1312
2SC1313
2SA628A
2SC710
2SC869
2SC1919
2SA726S

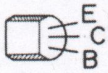

2SK34

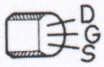

2SK61

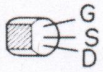

2SK19

2SC2238C
2SB536
2SD325R
2SA968C

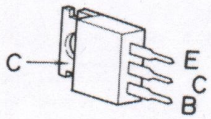

2SC1904A
2SA899A

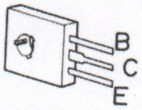

2SC461

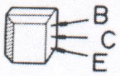

3SK45

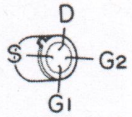

2SD746A
2SB706A

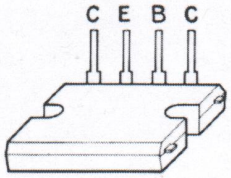

HA1197
PA3001-A
PA1001-A
PA1002-A

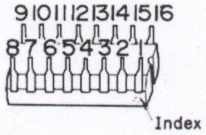

2SC1885
2SA912

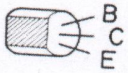

2SC1344

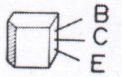

2SK131

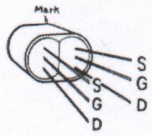

2SA798
2SA979

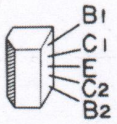

M5S003P
M53293P
M53273P

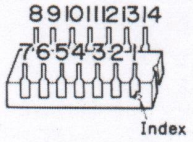

HA1201

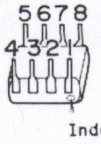

PA3004

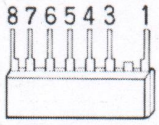

2SC2071
2SA939

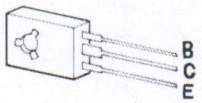

2SD712
2SB682

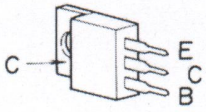

Miscellaneaus Parts

NOTE:

- *Capacitors: in μF unless otherwise noted p:pF*
- *Resistors: in Ω, ¼W unless otherwise noted k:kΩ, M:MΩ*

CAPACITORS

Symbol	Part No.	Description		
C1	ACH-084	Electrolytic	22000	100V
C2	ACH-084	Electrolytic	22000	100V
C3	ACH-084	Electrolytic	22000	100V
C4	ACH-084	Electrolytic	22000	100V
C5	ACG-003	Ceramic	0.01	125V
C6	ACG-003	Ceramic	0.01	125V
C7	CKDYF 403Z 50	Ceramic	0.04	50V
C8	CKDYF 403Z 50	Ceramic	0.04	50V
C9	CKDYF 403Z 50	Ceramic	0.04	50V
C10	CKDYF 403Z 50	Ceramic	0.04	50V
C11	CKDYF 403Z 50	Ceramic	0.04	50V
C12	CKDYF 403Z 50	Ceramic	0.04	50V
C13	ACG-009	Ceramic	0.047	150V
C14	ACG-009	Ceramic	0.047	150V
C15	ACG-009	Ceramic	0.047	150V
C16	ACG-009	Ceramic	0.047	150V
C17	ACG-003	Ceramic	0.01	125V
C18	ACG-009	Ceramic	0.047	150V

RESISTORS

Symbol	Part No.	Description		
R1	RD½PS 225J	Carbon film	2.2M	½W
R2	ACN-026	Wire wound	360	10W
R3	ACN-027	Wire wound	470	10W

OTHERS

Symbol	Part No.	Description
X1	ASS-004	Crystal resonator
T1	T22-025	Balun
T2	ATB-507	Ferrite bar-antenna
T3	ATT-446	Power transformer
S26	ASA-504	Lever switch (POWER)
	ADG-013	AC power cord
	AKR-032	Fuse holder 1P
	AKK-005	Lamp socket
L1	T24-028	RF choke coil

SEMICONDUCTORS

Symbol	Part No.	Description
Q1	2SB706A-R,SorQ	Transistor
Q2	2SB706A-R,SorQ	Transistor
Q3	2SB706A-R,SorQ	Transistor
Q4	2SB706A-R,SorQ	Transistor
Q5	2SB706A-R,SorQ	Transistor
Q6	2SB706A-R,SorQ	Transistor
Q7	2SD746A-R,SorQ	Transistor
Q8	2SD746A-R,SorQ	Transistor
Q9	2SD746A-R,SorQ	Transistor
Q10	2SD746A-R,SorQ	Transistor
Q11	2SD746A-R,SorQ	Transistor
Q12	2SD746A-R,SorQ	Transistor
D1	AEL-309	LED (FINE TUNE)
D2	AEL-309	LED (STEREO)
D3	AEL-310	LED (QUARTZ LOCKED)

LAMPS

Symbol	Part No.	Description	
PL1	AEL-029	Lamp (wedge type) 8V	0.3A
PL2	AEL-029	Lamp (wedge type) 8V	0.3A
PL3	AEL-029	Lamp (wedge type) 8V	0.3A
PL4	AEL-029	Lamp (wedge type) 8V	0.3A
PL5	AEL-067	Lamp (wedge type) 8V	50mA
PL6	AEL-067	Lamp with wires 8V	50mA
PL7	AEL-067	Lamp with wires 8V	50mA
PL8	AEL-067	Lamp with wires 8V	50mA
PL9	AEL-067	Lamp with wires 8V	50mA
PL10	AEL-069	Lamp with wires 8V	50mA
PL11	AEL-069	Lamp with wires 8V	50mA
PL12	AEL-095	Lamp with wires 8V	50mA

FUSES

Symbol	Part No.	Description	
FU1	AEK-106	Fuse	1A
FU2	AEK-106	Fuse	1A
FU3	AEK-104	Fuse	1.5A
FU4	AEK-104	Fuse	1.5A
FU5	AEK-103	Fuse	2A
FU6	AEK-303	Fuse	15A

P.C. BOARD ASSEMBLIES

Symbol	Part No.	Description
	AWB-030	FM front end
	AWE-093	Tuner assembly
	AWX-124	APC assembly
	AWG-059	Tone control assembly
	AWG-058	Flat amplifier assembly
	AWF-030	EQ amplifier assembly
	AWM-119	Filter assembly
	AWR-154	Power supply assembly
	AWS-125	Slide switch assembly
	GWR-106	Rectifier L assembly
	GWR-107	Rectifier R assembly
	GWH-109	Power amplifier L assembly
	GWH-110	Power amplifier R assembly
	GWS-129	Function selector assembly
	GWS-130	Cartridge load assembly
	GWM-104	APC control/MIC assembly
	AWM-122	Meter amplifier assembly

Circuit Diagram of IC

HA1197 (AM IC)

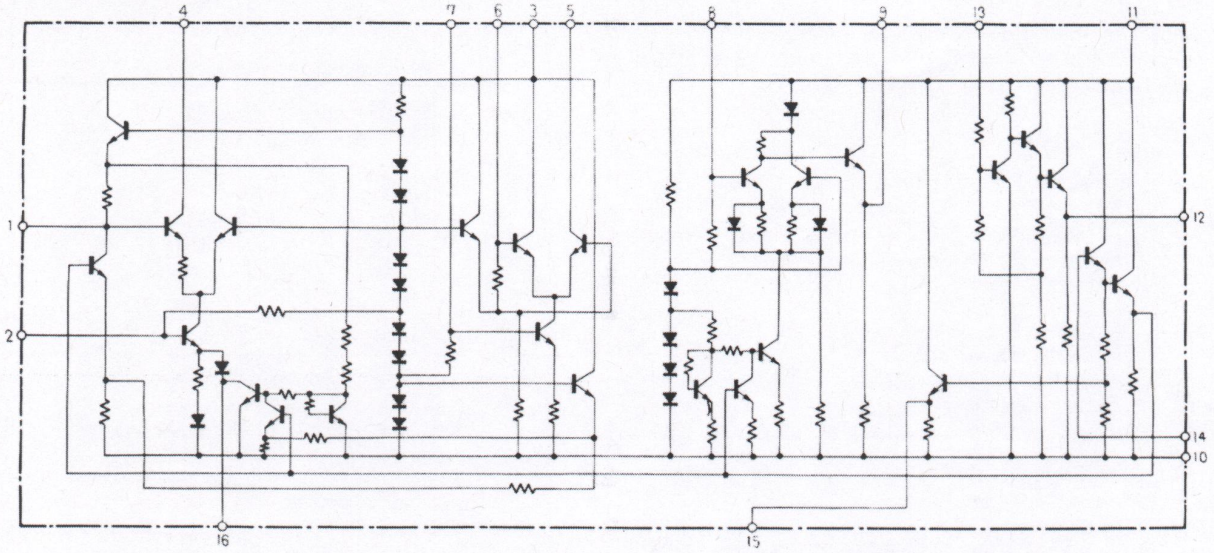

HA1201

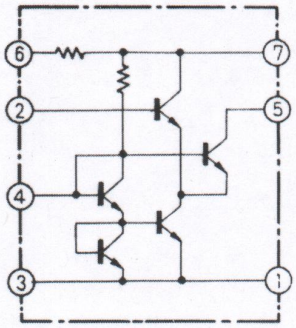

FM Front End (AWB-030)

• *Defective front ends should be replaced altogether.*

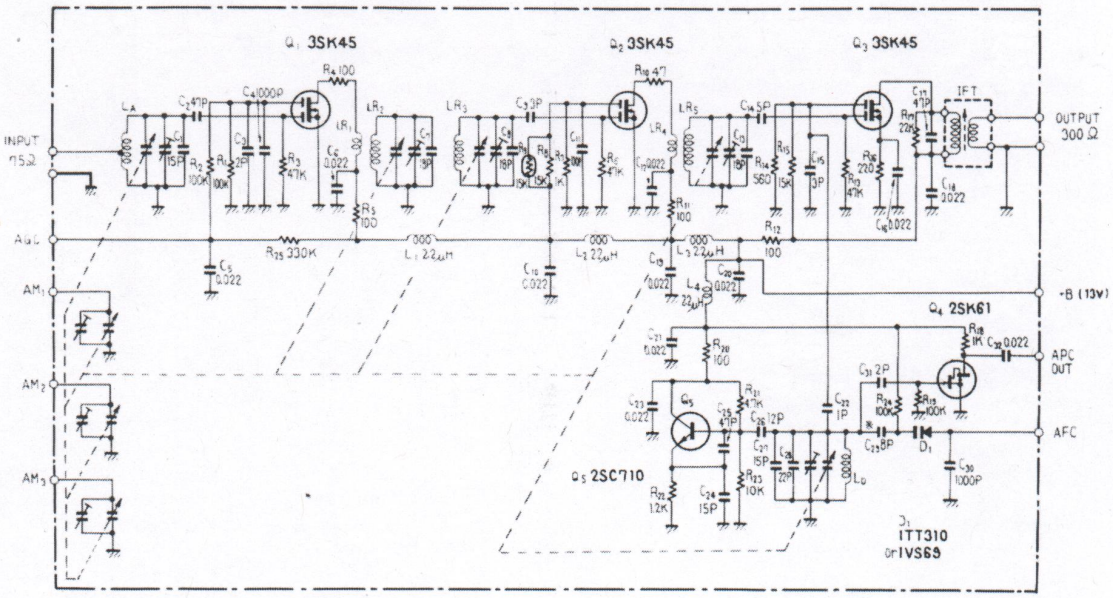

12.2 SCHEMATIC DIAGRAM

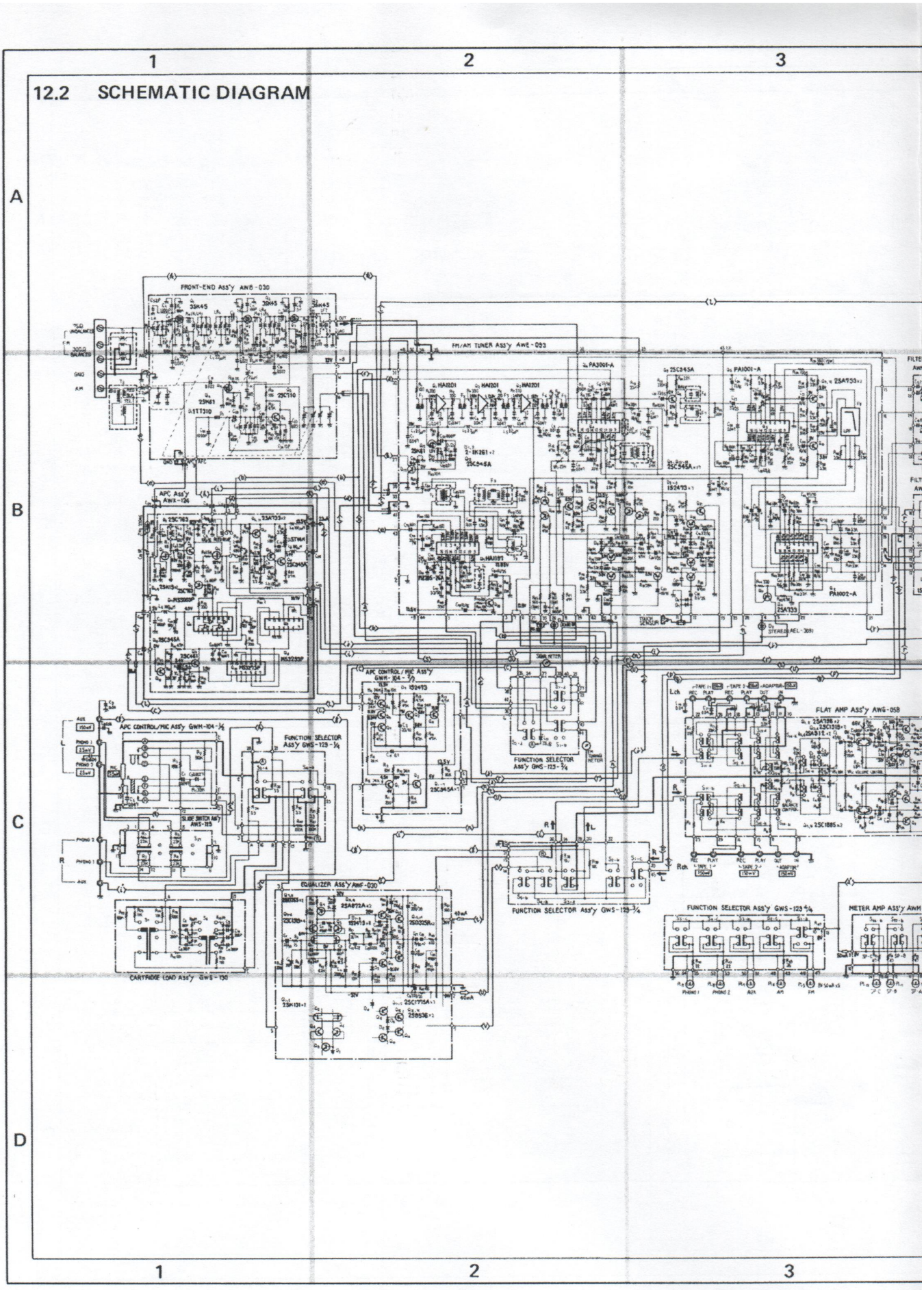

NOTE:
The indicated semiconductors are representative ones only. Other alternative semiconductors may be used and are listed in the parts lists.

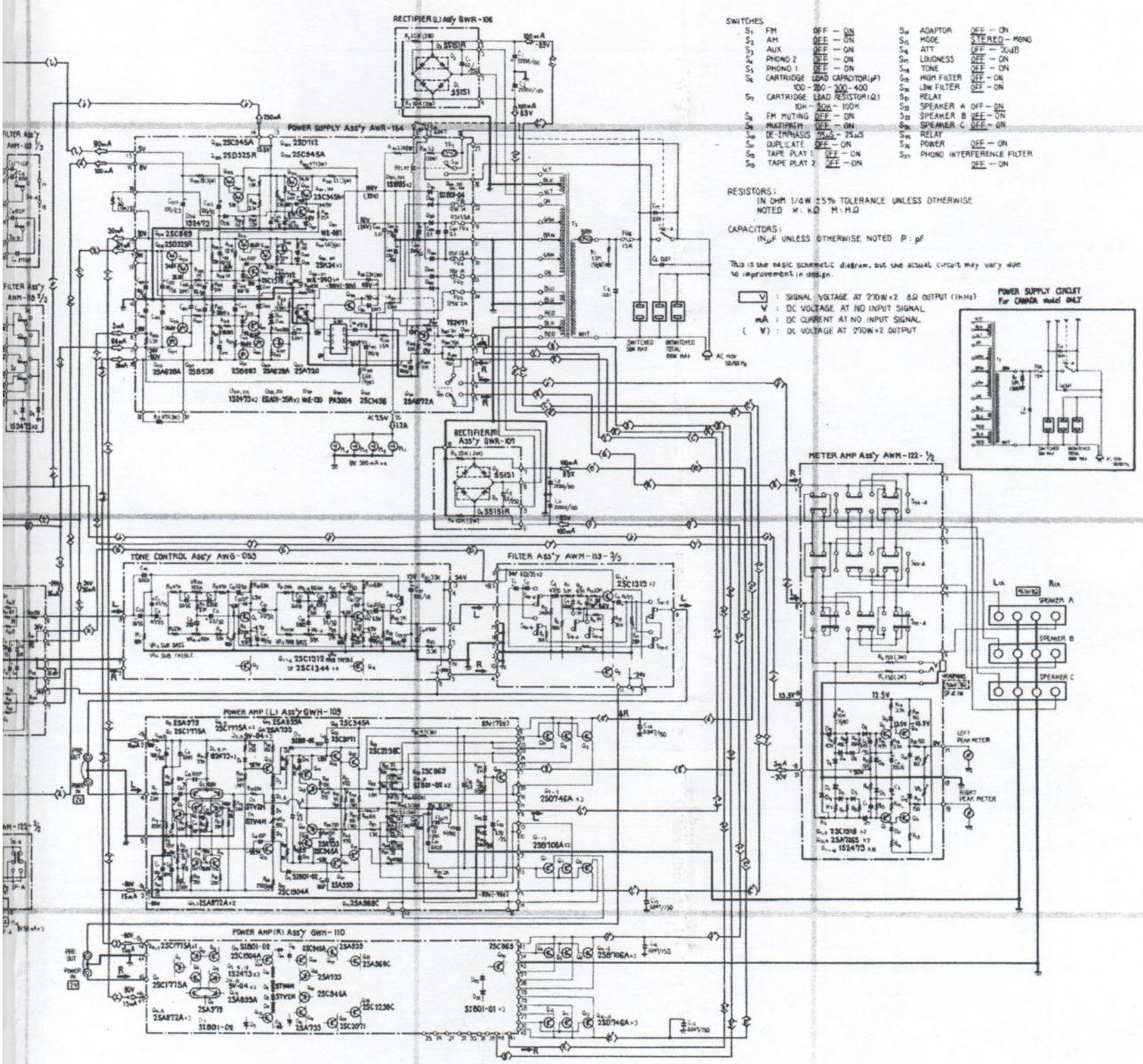
SWITCHES
RESISTORS:
IN OHM 1/4W ±5% TOLERANCE UNLESS OTHERWISE NOTED K : kΩ M : MΩ
CAPACITORS:
IN μF UNLESS OTHERWISE NOTED P : pF
This is the basic schematic diagram, but the actual circuit may vary due to improvement in design.
V : SIGNAL VOLTAGE AT 2?0W×2 8Ω OUTPUT (1kHz)
V : DC VOLTAGE AT NO INPUT SIGNAL
mA : DC CURRENT AT NO INPUT SIGNAL
(V) : DC VOLTAGE AT 2?0W×2 OUTPUT
POWER SUPPLY CIRCUIT For CANADA model ONLY
RECTIFIER(L) Ass'y GWR-106
POWER SUPPLY Ass'y AWR-154
RECTIFIER(R) Ass'y GWR-101
METER AMP Ass'y AWM-122-½
TONE CONTROL Ass'y AWG-053
FILTER Ass'y AWM-113-⅓
POWER AMP (L) Ass'y GWH-109
POWER AMP (R) Ass'y GWH-110
SPEAKER A
SPEAKER B
SPEAKER C
LEFT PEAK METER
RIGHT PEAK METER

12.3 TUNER ASSEMBLY (AWE-093)

NOTICE:
The FM ceramic filter (ATF-050) symbol No. F1~F5 in the tuner assembly (AWE-093) and the crystal resonator (ASS-004) symbol No. X1 in the APC assembly (AWX-124), are being graded in 3 ranks and marked in Orange, Red and Blue dots respectively by their characteristics.
When replacing, use those dotted in the same color.

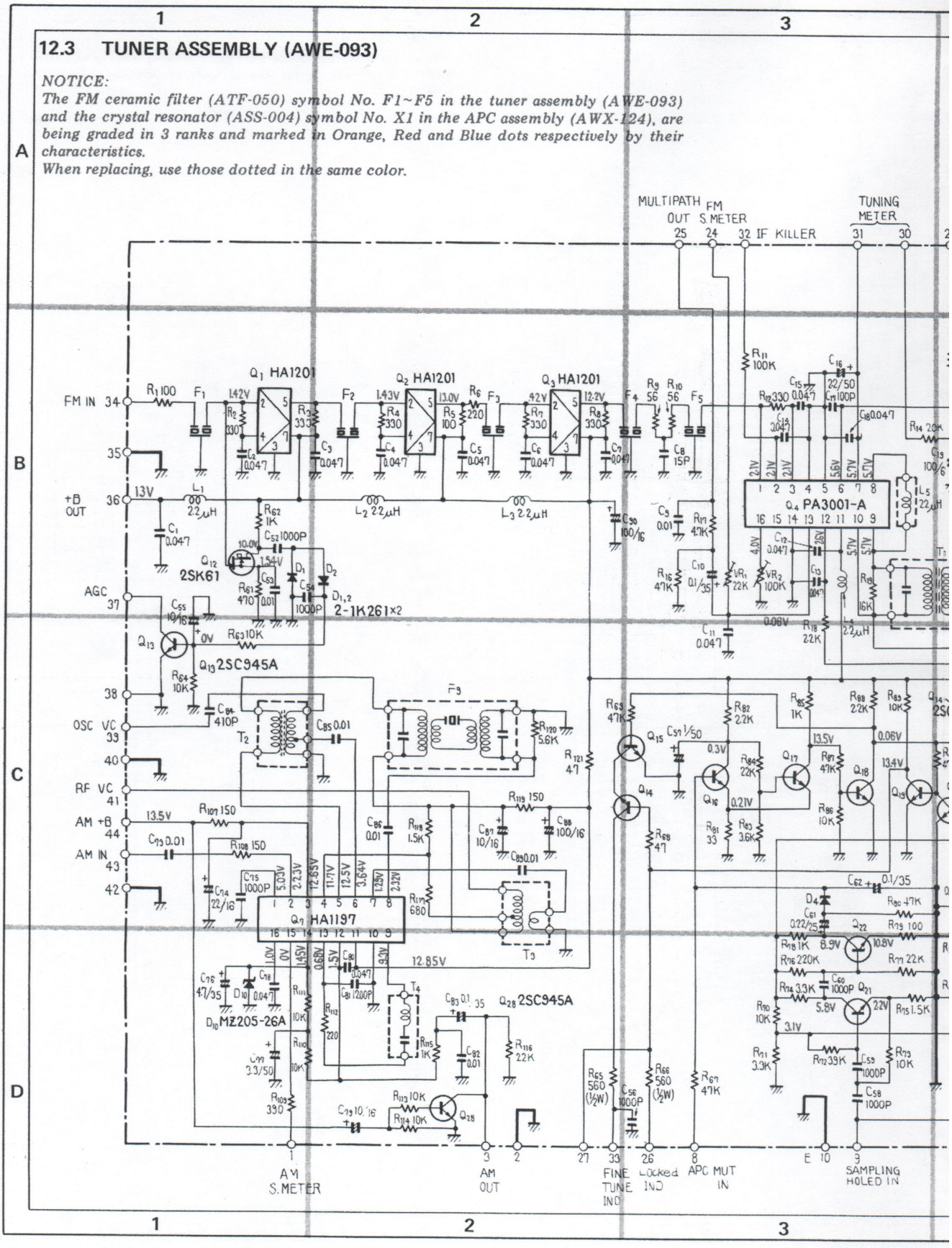

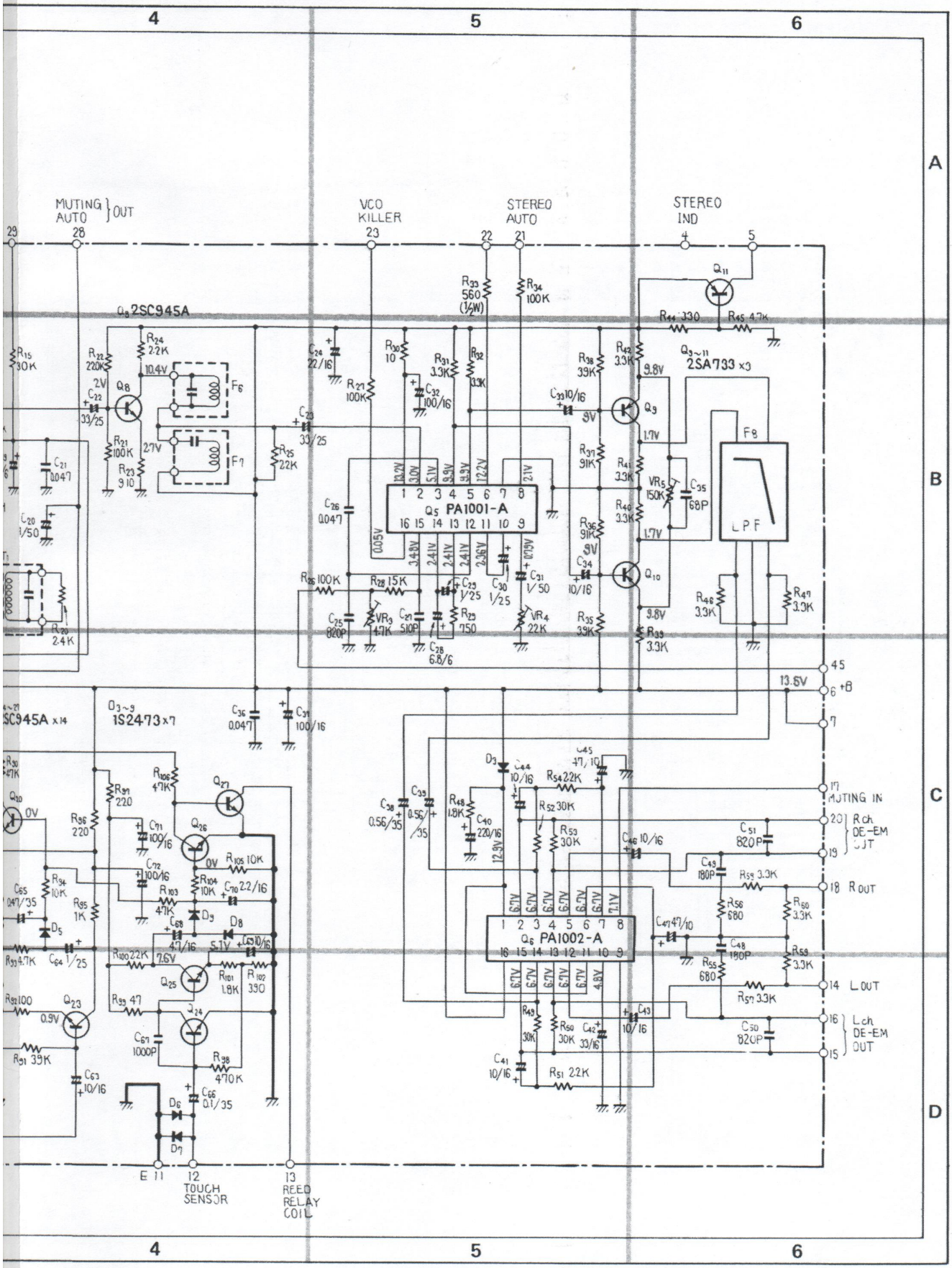

MUTING AUTO OUT
VCO KILLER
STEREO AUTO
STEREO IND
Q8 2SC945A
Q9~11 2SA733 x3
Q5 PA1001-A
Q6 PA1002-A
D3~9 1S2473 x7
SC945A x14
LPF
+B
MUTING IN
Rch DE-EM OUT
R OUT
L OUT
Lch DE-EM OUT
TOUCH SENSOR
REED RELAY COIL

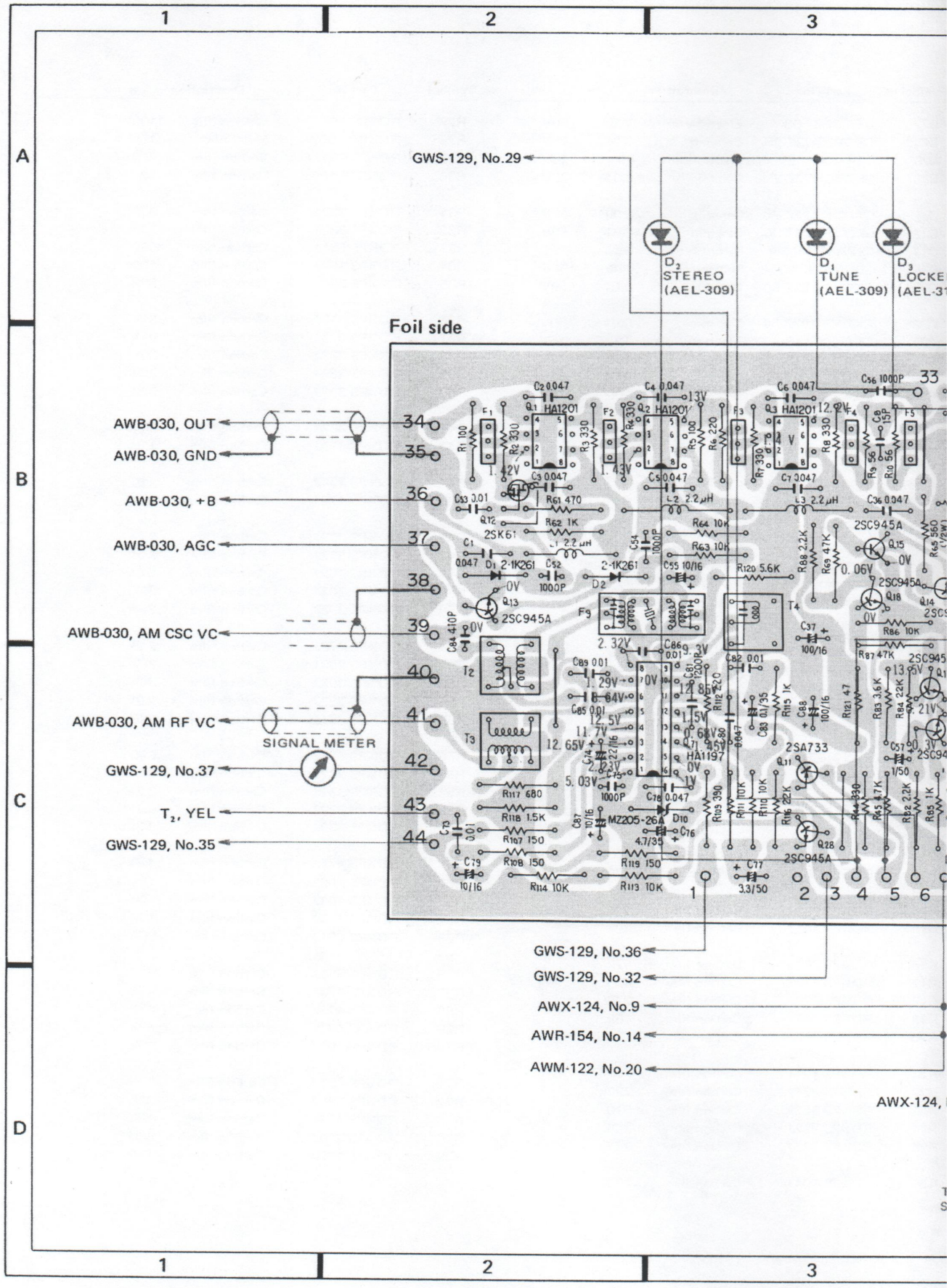
1
2
3
A
B
C
D
GWS-129, No.29
D2 STEREO (AEL-309)
D1 TUNE (AEL-309)
D3 LOCKE (AEL-31
Foil side
AWB-030, OUT
AWB-030, GND
AWB-030, +B
AWB-030, AGC
AWB-030, AM CSC VC
AWB-030, AM RF VC
SIGNAL METER
GWS-129, No.37
T2, YEL
GWS-129, No.35
34
35
36
37
38
39
40
41
42
43
44
GWS-129, No.36
GWS-129, No.32
AWX-124, No.9
AWR-154, No.14
AWM-122, No.20
AWX-124,

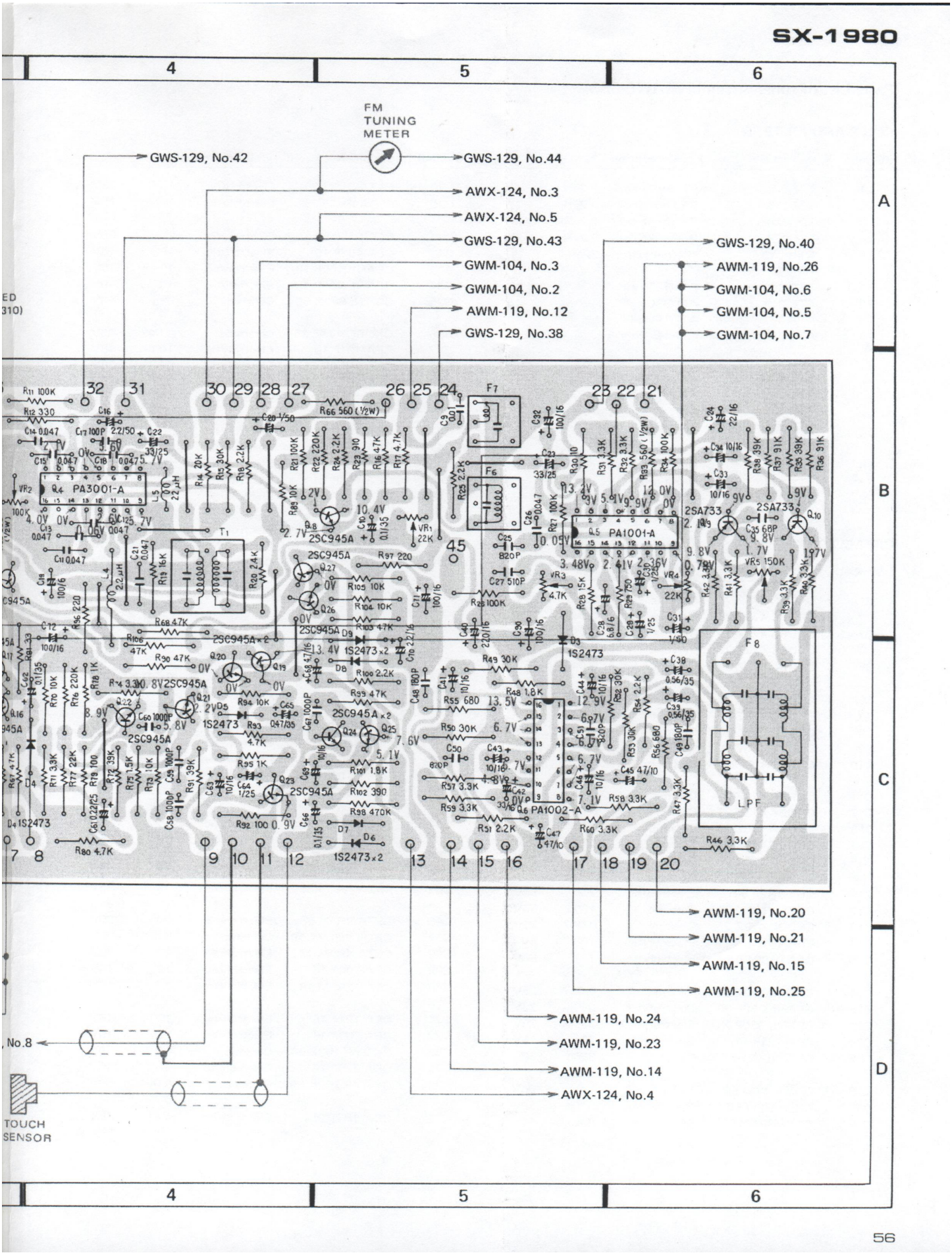
4
5
6
A
B
C
D
FM TUNING METER
GWS-129, No.42
GWS-129, No.44
AWX-124, No.3
AWX-124, No.5
GWS-129, No.43
GWM-104, No.3
GWM-104, No.2
AWM-119, No.12
GWS-129, No.38
GWS-129, No.40
AWM-119, No.26
GWM-104, No.6
GWM-104, No.5
GWM-104, No.7
AWM-119, No.20
AWM-119, No.21
AWM-119, No.15
AWM-119, No.25
AWM-119, No.24
AWM-119, No.23
AWM-119, No.14
AWX-124, No.4
No.8
TOUCH SENSOR
PA3001-A
PA1001-A
PA1002-A
2SC945A
2SA733
1S2473
LPF

Parts List of tuner Assembly (AWE-093)

COILS AND FILTERS

Symbol	Part No.	Description	
L1	T24-028	RF choke coil	2.2μH
L2	T24-028	RF choke coil	2.2μH
L3	T24-028	RF choke coil	2.2μH
L4	T24-028	RF choke coil	2.2μH
L5	ATH-019	Microinductor	22μH
T1	ATE-040	FM DET coil	
T2	ATB-019	AM OSC coil	
T3	ATB-052	AM RF coil	
T4	ATF-039	455kHz filter	
F1	ATF-050	FM ceramic filter	
F2	ATF-050	FM ceramic filter	
F3	ATF-050	FM ceramic filter	
F4	ATF-050	FM ceramic filter	
F5	ATF-050	FM ceramic filter	
F6	ATF-023	Unti-birdy filter	
F7	ATF-024	Unti-birdy filter	
F8	ATF-047	Low pass filter	

CAPACITORS

Symbol	Part No.	Description		
C1	CKDBC 473Z 25	Ceramic	0.047	25V
C2	CKDBC 473Z 25	Ceramic	0.047	25V
C3	CKDBC 473Z 25	Ceramic	0.047	25V
C4	CKDBC 473Z 25	Ceramic	0.047	25V
C5	CKDBC 473Z 25	Ceramic	0.047	25V
C6	CKDBC 473Z 25	Ceramic	0.047	25V
C7	CKDBC 473Z 25	Ceramic	0.047	25V
C8	CCDSL 150K 50	Ceramic	15p	50V
C9	CKDYF 103Z 50	Ceramic	0.01	50V
C10	CSZA 0R1M 35	Electrolytic	0.1	35V
C11	CKDBC 473Z 25	Ceramic	0.047	25V
C12	CKDBC 473Z 25	Ceramic	0.047	25V
C13	CKDBC 473Z 25	Ceramic	0.047	25V
C14	CKDBC 473Z 25	Ceramic	0.047	25V
C15	CKDBC 473Z 25	Ceramic	0.047	25V
C16	CEA 2R2P 50	Electrolytic	2.2	50V
C17	CCDSL 101K 50	Ceramic	100p	50V
C18	CKDBC 473Z 25	Ceramic	0.047	25V
C19	CEA 101P 6	Electrolytic	100	6V
C20	CEA 010P 50	Electrolytic	1	50V
C21	CKDBC 473Z 25	Ceramic	0.047	25V
C22	CEANL 330P 25	Electrolytic	33	25V
C23	CEANL 330P 25	Electrolytic	33	25V
C24	CEA 220P 16	Electrolytic	22	16V
C25	CKDYB 821K 50	Ceramic	820p	50V
C26	CQMA 473J 50	Mylar	0.047	50V
C27	CQSH 511J 50	Polystyrene	510p	50V
C28	CSZA 6R8M 6	Electrolytic	6.8	6V
C29	CSZA 010M 25	Electrolytic	1	25V
C30	CSZA 010M 25	Electrolytic	1	25V
C31	CEA 010P 50	Electrolytic	1	50V
C32	CEA 101P 16	Electrolytic	100	16V
C33	CEANL 100P 16	Electrolytic	10	16V
C34	CEANL 100P 16	Electrolytic	10	16V
C35	CCDSL 680K 50	Ceramic	68p	50V
C36	CKDBC 473Z 25	Ceramic	0.047	25V
C37	CEA 101P 16	Electrolytic	100	16V
C38	CSZA R56K 35	Electrolytic	0.56	35V
C39	CSZA R56K 35	Electrolytic	0.56	35V
C40	CEA 221P 16	Electrolytic	220	16V
C41	CEA 100P 16	Electrolytic	10	16V
C42	CEA 330P 16	Electrolytic	33	16V
C43	CEANL 100P 16	Electrolytic	10	16V
C44	CEA 100P 16	Electrolytic	10	16V
C45	CEA 470P 10	Electrolytic	47	10V
C46	CEANL 100P 16	Electrolytic	10	16V
C47	CEA 470P 10	Electrolytic	47	10V
C48	CCDSL 181K 50	Ceramic	180p	50V
C49	CCDSL 181K 50	Ceramic	180p	50V
C50	CQSA 821G 50	Polystyrene	820p	50V
C51	CQSA 821G 50	Polystyrene	820p	50V
C52	CKDYB 102K 50	Ceramic	0.001	50V
C53	CKDYF 103Z 50	Ceramic	0.01	50V
C54	CKDYB 102K 50	Ceramic	0.001	50V
C55	CEA 100P 16	Electrolytic	10	16V
C56	CKDYB 102K 50	Ceramic	0.001	50V
C57	CEA 010P 50	Electrolytic	1	50V
C58	CQSA 102J 50	Polystyrene	1000p	50V
C59	CQSA 102J 50	Polystyrene	1000p	50V
C60	CQSA 102J 50	Polystyrene	1000p	50V
C61	CSZA R22M 35	Electrolytic	0.22	35V
C62	CSZA 0R1M 35	Electrolytic	0.1	35V
C63	CEA 100P 16	Electrolytic	10	16V
C64	CSZA 010M 25	Electrolytic	1	25V
C65	CSZA R47M 35	Electrolytic	0.47	35V
C66	CSZA 0R1M 35	Electrolytic	0.1	35V
C67	CKDYB 102K 50	Ceramic	0.001	50V
C68	CSZA 4R7M 16	Electrolytic	4.7	16V
C69	CEA 100P 16	Electrolytic	10	16V
C70	CSZA 2R2M 16	Electrolytic	2.2	16V
C71	CEA 101P 16	Electrolytic	100	16V
C72	CEA 101P 16	Electrolytic	100	16V
C73	CKDYF 103Z 50	Ceramic	0.01	50V
C74	CEA 220P 16	Electrolytic	22	16V
C75	CKDYB 102K 50	Ceramic	0.001	50V
C76	CEA 4R7P 35	Electrolytic	4.7	35V

Symbol	Part No.	Description		
C77	CEA 3R3P 50	Electrolytic	3.3	50V
C78	CKDBC 473Z 25	Ceramic	0.047	25V
C79	CEA 100P 16	Electrolytic	10	16V
C80	CKDBC 473Z 25	Ceramic	0.047	25V
C81	CKDYB 122K 50	Ceramic	0.0012	50V
C82	CKDYF 103Z 50	Ceramic	0.01	50V
C83	CSZA 0R1M 35	Electrolytic	0.1	35V
C84	CQSA 411J 50	Polystyrene	410p	50V
C85	CKDYF 103Z 50	Ceramic	0.01	50V
C86	CKDYF 103Z 50	Ceramic	0.01	50V
C87	CEA 100P 16	Electrolytic	10	16V
C88	CEA 101P 16	Electrolytic	100	16V
C89	CKDYF 103Z 50	Ceramic	0.01	50V
C90	CEA 101P 16	Electrolytic	100	16V

RESISTORS

Symbol	Part No.	Description	
VR1	ACP-056	Semi-fixed	(22k-B)
VR2	C92-047	Semi-fixed	(100k-B)
VR3	ACP-018	Semi-fixed	(4.7k-B)
VR4	ACP-056	Semi-fixed	(22k-B)
VR5	ACP-014	Semi-fixed	(150k-B)
R1	RD¼PS 101J	Carbon film	100
R2	RD¼PS 331J	Carbon film	330
R3	RD¼PS 331J	Carbon film	330
R4	RD¼PS 331J	Carbon film	330
R5	RD¼PS 101J	Carbon film	100
R6	RD¼PS 221J	Carbon film	220
R7	RD¼PS 331J	Carbon film	330
R8	RD¼PS 331J	Carbon film	330
R9	RD¼PS 560J	Carbon film	56
R10	RD¼PS 560J	Carbon film	56
R11	RD¼PS 104J	Carbon film	100k
R12	RD¼PS 331J	Carbon film	330
R13			
R14	RD¼PS 203J	Carbon film	20k
R15	RD¼PS 303J	Carbon film	30k
R16	RD¼PS 473J	Carbon film	47k
R17	RD¼PS 472J	Carbon film	4.7k
R18	RD¼PS 222J	Carbon film	2.2k
R19	RD¼PS 163J	Carbon film	16k
R20	RD¼PS 242J	Carbon film	2.4k
R21	RD¼PS 104J	Carbon film	100k
R22	RD¼PS 224J	Carbon film	220k
R23	RD¼PS 911J	Carbon film	910
R24	RD¼PS 222J	Carbon film	2.2k
R25	RD¼PS 222J	Carbon film	2.2k
R26	RD¼PS 104J	Carbon film	100k

Symbol	Part No.	Description	
R27	RD¼PS 104J	Carbon film	100k
R28	RN¼PR 1502F	Metal film	15k
R29	RD¼PS 751J	Carbon film	750
R30	RD¼PSF 100J	Carbon film	10
R31	RD¼PS 332J	Carbon film	3.3k
R32	RD¼PS 332J	Carbon film	3.3k
R33	RD¼PS 561J	Carbon film	560
R34	RD¼PS 104J	Carbon film	100k
R35	RD¼PS 393J	Carbon film	39k
R36	RD¼PS 913J	Carbon film	91k
R37	RD¼PS 913J	Carbon film	91k
R38	RD¼PS 393J	Carbon film	39k
R39	RD¼PS 332J	Carbon film	3.3k
R40	RD¼PS 332J	Carbon film	3.3k
R41	RD¼PS 332J	Carbon film	3.3k
R42	RD¼PS 332J	Carbon film	3.3k
R43			
R44	RD¼PS 331J	Carbon film	330
R45	RD¼PS 472J	Carbon film	4.7k
R46	RD¼PS 332J	Carbon film	3.3k
R47	RD¼PS 332J	Carbon film	3.3k
R48	RD¼PS 182J	Carbon film	1.8k
R49	RD¼PS 303J	Carbon film	30k
R50	RD¼PS 303J	Carbon film	30k
R51	RD¼PS 222J	Carbon film	2.2k
R52	RD¼PS 303J	Carbon film	30k
R53	RD¼PS 303J	Carbon film	30k
R54	RD¼PS 222J	Carbon film	2.2k
R55	RD¼PS 681J	Carbon film	680
R56	RD¼PS 681J	Carbon film	680
R57	RD¼PS 332J	Carbon film	3.3k
R58	RD¼PS 332J	Carbon film	3.3k
R59	RD¼PS 332J	Carbon film	3.3k
R60	RD¼PS 332J	Carbon film	3.3k
R61	RD¼PS 471J	Carbon film	470
R62	RD¼PS 102J	Carbon film	1k
R63	RD¼PS 103J	Carbon film	10k
R64	RD¼PS 103J	Carbon film	10k
R65	RD½PS 561J	Carbon film	560
R66	RD½PS 561J	Carbon film	560
R67	RD¼PS 473J	Carbon film	47k
R68	RD¼PS 473J	Carbon film	47k
R69	RD¼PS 473J	Carbon film	47k
R70	RD¼PS 103J	Carbon film	10k
R71	RD¼PS 332J	Carbon film	3.3k
R72	RD¼PS 393J	Carbon film	39k
R73	RD¼PS 103J	Carbon film	10k
R74	RD¼PS 332J	Carbon film	3.3k
R75	RD¼PS 152J	Carbon film	1.5k

Symbol	Part No.	Description	
R76	RD¼PS 224J	Carbon film	220k
R77	RD¼PS 223J	Carbon film	22k
R78	RD¼PS 102J	Carbon film	1k
R79	RD¼PS 101J	Carbon film	100
R80	RD¼PS 472J	Carbon film	4.7k
R81	RD¼PS 330J	Carbon film	33
R82	RD¼PS 222J	Carbon film	2.2k
R83	RD¼PS 362J	Carbon film	3.6k
R84	RD¼PS 223J	Carbon film	22k
R85	RD¼PS 102J	Carbon film	1k
R86	RD¼PS 103J	Carbon film	10k
R87	RD¼PS 473J	Carbon film	47k
R88	RD¼PS 222J	Carbon film	2.2k
R89	RD¼PS 103J	Carbon film	10k
R90	RD¼PS 473J	Carbon film	47k
R91	RD¼PS 393J	Carbon film	39k
R92	RD¼PS 101J	Carbon film	100
R93	RD¼PS 472J	Carbon film	4.7k
R94	RD¼PS 103J	Carbon film	10k
R95	RD¼PS 102J	Carbon film	1k
R96	RD¼PSF 221J	Carbon film	220
R97	RD¼PSF 221J	Carbon film	220
R98	RD¼PS 474J	Carbon film	470k
R99	RD¼PS 473J	Carbon film	47k
R100	RD¼PS 222J	Carbon film	2.2k
R101	RD¼PS 182J	Carbon film	1.8k
R102	RD¼PS 391J	Carbon film	390
R103	RD¼PS 473J	Carbon film	47k
R104	RD¼PS 103J	Carbon film	10k
R105	RD¼PS 103J	Carbon film	10k
R106	RD¼PS 473J	Carbon film	47k
R107	RD¼PSF 151J	Carbon film	150
R108	RD¼PS 151J	Carbon film	150
R109	RD¼PS 391J	Carbon film	390
R110	RD¼PS 103J	Carbon film	10k
R111	RD¼PS 103J	Carbon film	10k
R112	RD¼PS 221J	Carbon film	220
R113	RD¼PS 103J	Carbon film	10k
R114	RD¼PS 103J	Carbon film	10k
R115	RD¼PS 102J	Carbon film	1k
R116	RD¼PS 223J	Carbon film	22k
R117	RD¼PS 681J	Carbon film	680
R118	RD¼PS 152J	Carbon film	1.5k
R119	RD¼PSF 151J	Carbon film	150
R120	RD¼PS 562J	Carbon film	5.6k
R121	RD¼PSF 470J	Carbon film	47

SEMICONDUCTORS

Symbol	Part No.	Description
Q1	HA1201	IC
Q2	HA1201	IC
Q3	HA1201	IC
Q4	PA3001-A	IC
Q5	PA1001-A	IC
Q6	PA1002-A	IC
Q7	HA1197	IC
Q8	2SC945A-Q or R (2SC1914A-F)	Transistor
Q9	2SA733-Q or R (2SA904A-F)	Transistor
Q10	2SA733-Q or R (2SA904A-F)	Transistor
Q11	2SA733-Q or R (2SA904A-F)	Transistor
Q12	2SK61-Y or GR	FET
Q13	2SC945A-Q or R (2SC1914A-F)	Transistor
Q14	2SC945A-Q or R (2SC1914A-F)	Transistor
Q15	2SC945A-Q or R (2SC1914A-F)	Transistor
Q16	2SC945A-Q or R (2SC1914A-F)	Transistor
Q17	2SC945A-Q or R (2SC1914A-F)	Transistor
Q18	2SC945A-Q or R (2SC1914A-F)	Transistor
Q19	2SC945A-Q or R (2SC1914A-F)	Transistor
Q20	2SC945A-Q or R (2SC1914A-F)	Transistor
Q21	2SC945A-Q or R (2SC1914A-F)	Transistor
Q22	2SC945A-Q or R (2SC1914A-F)	Transistor
Q23	2SC945A-Q or R (2SC1914A-F)	Transistor
Q24	2SC945A-Q or R (2SC1914A-F)	Transistor
Q25	2SC945A-Q or R (2SC1914A-F)	Transistor
Q26	2SC945A-Q or R (2SC1914A-F)	Transistor
Q27	2SC945A-Q or R (2SC1914A-F)	Transistor
Q28	2SC945A-Q or R (2SC1914A-F)	Transistor
D1	2-1K261	Diode
D2	2-1K261	Diode
D3	1S2473 (1S1555)	Diode
D4	1S2473 (1S1555)	Diode

Symbol	Part No.	Description
D5	1S2473 (1S1555)	Diode
D6	1S2473 (1S1555)	Diode
D7	1S2473 (1S1555)	Diode
D8	1S2473 (1S1555)	Diode
D9	1S2473 (1S1555)	Diode
D10	MZ205-26A	Zener diode

12.4 SLIDE SWITCH ASSEMBLY (AWS-125)

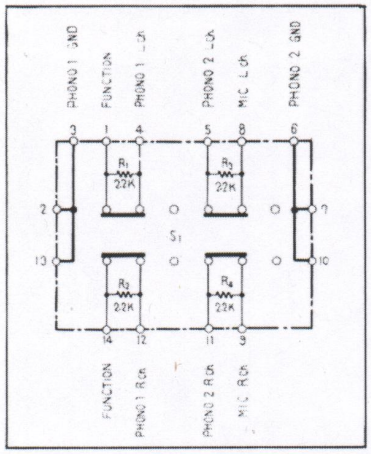

Parts List

SWITCH

Symbol	Part No.	Description
S1	ASH-018	Slide switch (INTERFERENCE FILTER)

RESISTORS

Symbol	Part No.	Description	
R1	RD¼PS 222J	Carbon film	2.2k
R2	RD¼PS 222J	Carbon film	2.2k
R3	RD¼PS 222J	Carbon film	2.2k
R4	RD¼PS 222J	Carbon film	2.2k

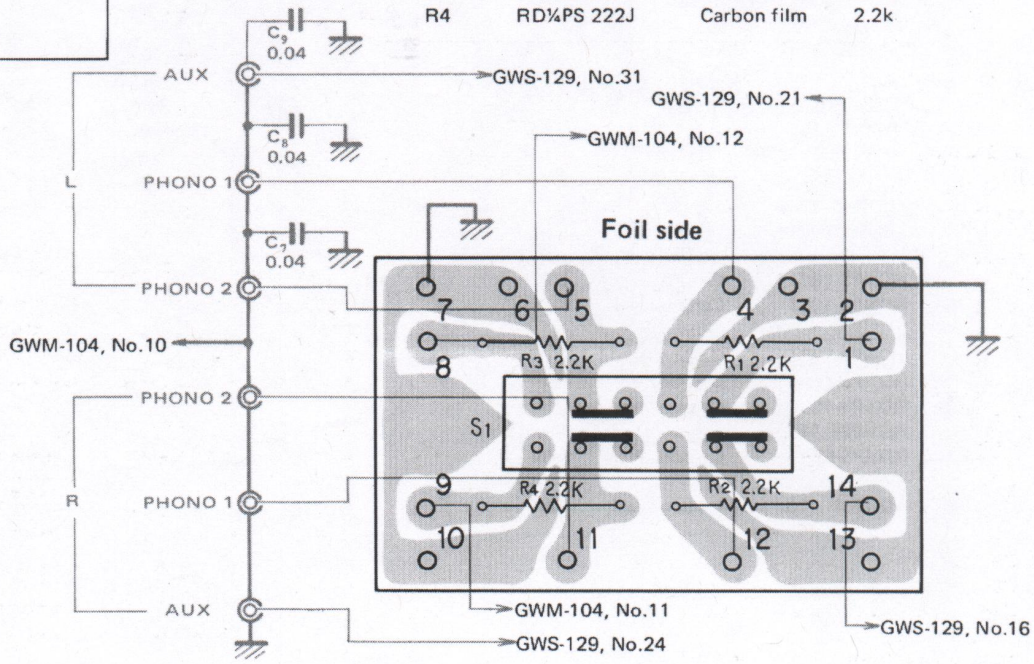

12.5 CARTRIDGE LOAD ASSEMBLY (GWS-130)

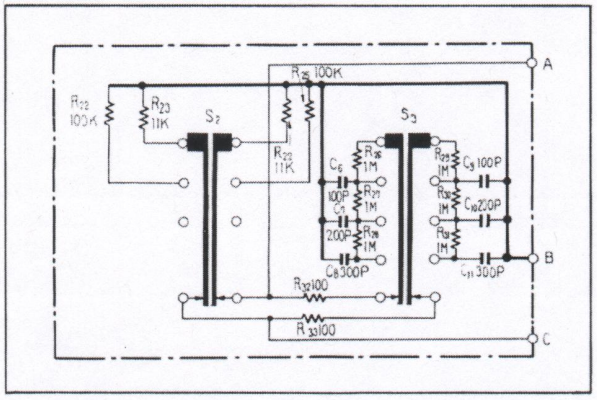

Foil side

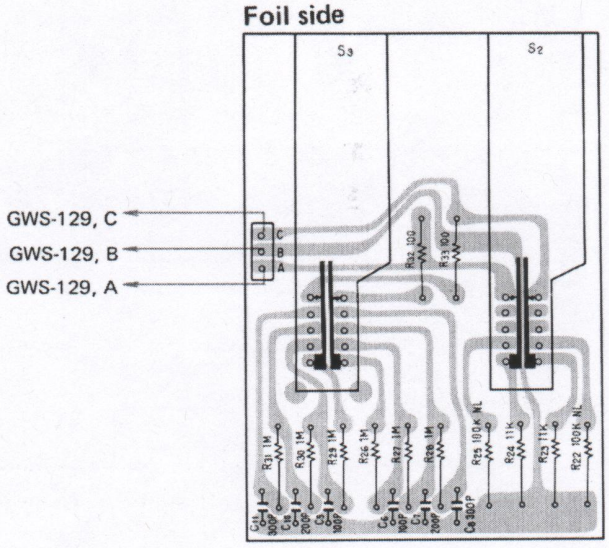

Parts List

SWITCHES

Symbol	Part No.	Description
S2	ASE-002	Slide rotary switch (kΩ)
S3	ASE-001	Slide rotary switch (pF)

CAPACITORS

Symbol	Part No.	Description		
C6	CQSH 101J 50	Polystyrene	100p	50V
C7	CQSH 201J 50	Polystyrene	200p	50V
C8	CQSH 301J 50	Polystyrene	300p	50V
C9	CQSH 101J 50	Polystyrene	100p	50V
C10	CQSH 201J 50	Polystyrene	200p	50V
C11	CQSH 301J 50	Polystyrene	300p	50V

RESISTORS

Symbol	Part No.	Description	
R22	RD¼PS 104J NL	Carbon film	100k
R23	RD¼PS 113J	Carbon film	11k
R24	RD¼PS 113J	Carbon film	11k
R25	RD¼PS 104J NL	Carbon film	100k
R26	RD¼PS 105J	Carbon film	1M
R27	RD¼PS 105J	Carbon film	1M
R28	RD¼PS 105J	Carbon film	1M
R29	RD¼PS 105J	Carbon film	1M
R30	RD¼PS 105J	Carbon film	1M
R31	RD¼PS 105J	Carbon film	1M
R32	RD¼PS 101J	Carbon film	100
R33	RD¼PS 101J	Carbon film	100

12.6 APC ASSEMBLY (AWX-124)

NOTICE:
The FM ceramic filter (ATF-050) symbol No. F1~F5 in the tuner assembly (AWE-093) and the crystal resonator (ASS-004) symbol No. X1 in the APC assembly (AWX-124), are being graded in 3 ranks and marked in Orange, Red and Blue dots respectively by their characteristics.
When replacing, use those dotted in the same color.

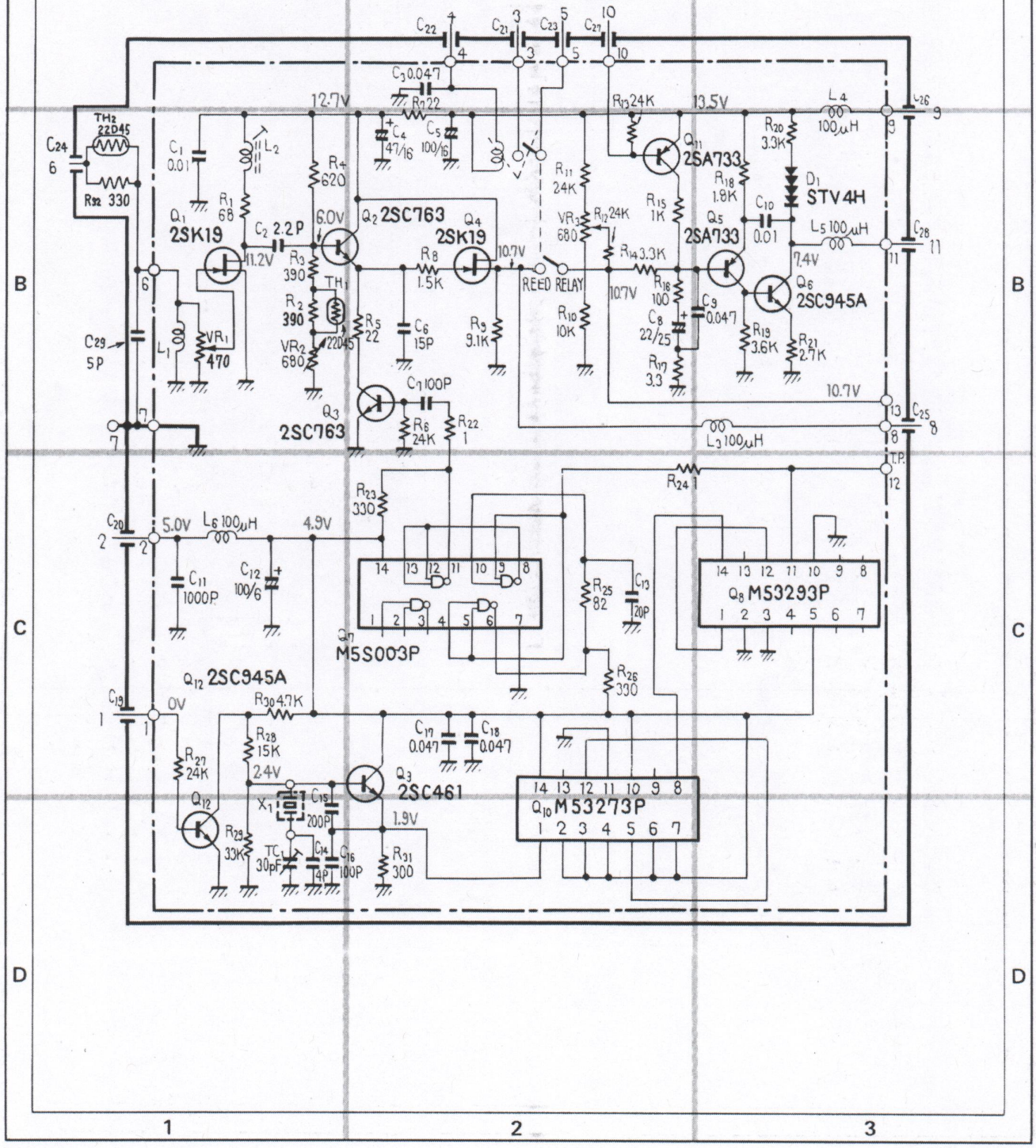

Foil side

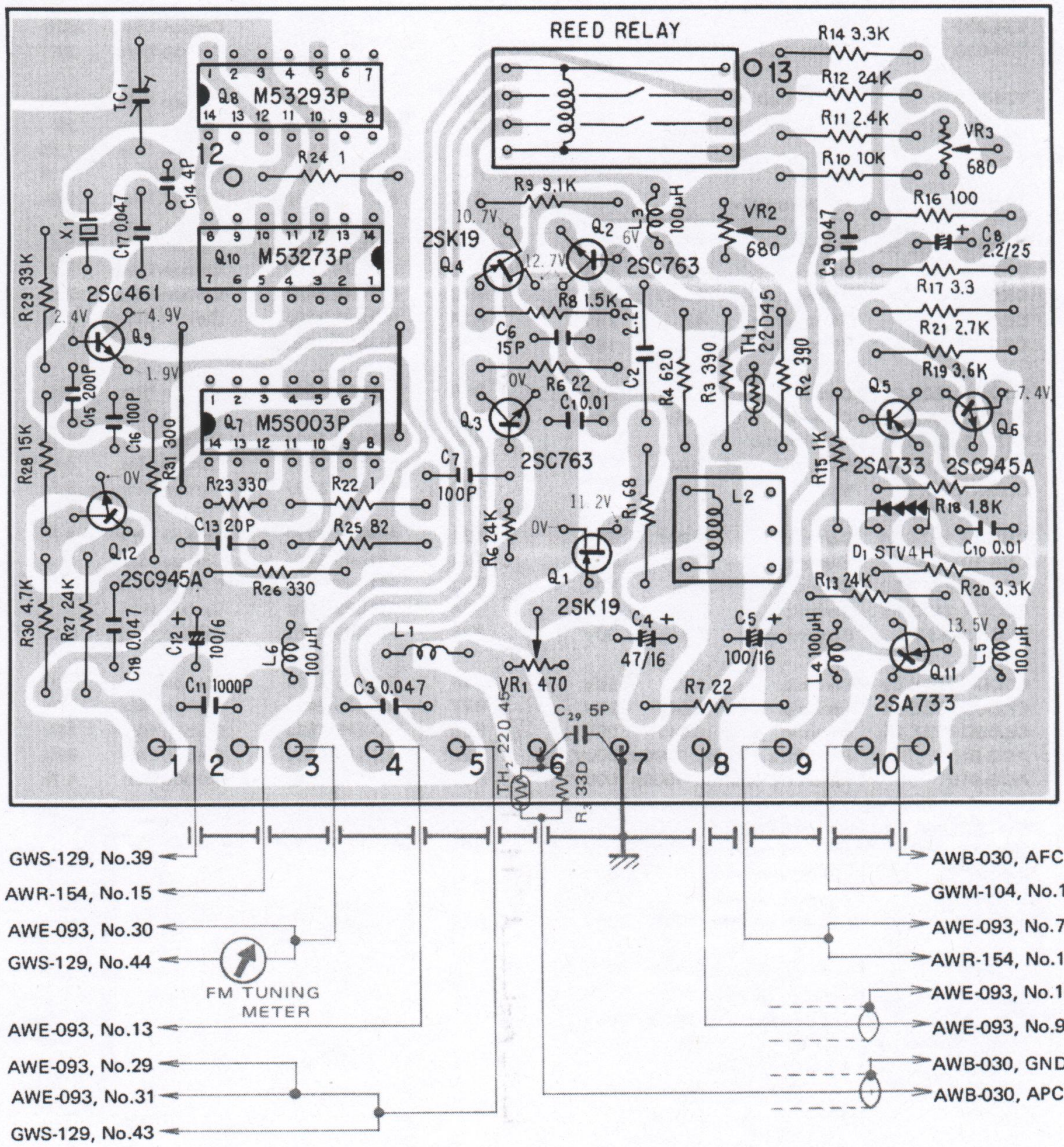
REED RELAY
Q8 M53293P
Q10 M53273P
Q7 M5S003P
TC1
X1
C14 4P
C17 0.047
R24 1
R29 33K
2SC461
Q9
C15 200P
C16 100P
R28 15K
R31 300
Q12
2SC945A
R30 4.7K
R27 24K
C18 0.047
C12 100/6
C11 1000P
L6 100μH
R23 330
R22 1
C13 20P
R25 82
R26 330
L1
C3 0.047
C7 100P
R6 24K
Q1
2SK19
VR1 470
TH2 220 45
R3 33D
C29 5P
R9 9.1K
2SK19
Q4
Q2
2SC763
L3 100μH
VR2 680
R8 1.5K
C6 15P
R6 22
C1 0.01
Q3
2SC763
C2 2.2P
R4 620
R3 390
TH1 22D45
R2 390
R1 68
L2
C4 47/16
C5 100/16
R7 22
R14 3.3K
R12 24K
R11 2.4K
R10 10K
VR3 680
R16 100
C9 0.047
C8 2.2/25
R17 3.3
R21 2.7K
R19 3.6K
Q5
Q6
R15 1K
2SA733
2SC945A
R18 1.8K
C10 0.01
D1 STV4H
R13 24K
R20 3.3K
L4 100μH
Q11
L5 100μH
2SA733
GWS-129, No.39
AWR-154, No.15
AWE-093, No.30
GWS-129, No.44
FM TUNING METER
AWE-093, No.13
AWE-093, No.29
AWE-093, No.31
GWS-129, No.43
AWB-030, AFC
GWM-104, No.1
AWE-093, No.7
AWR-154, No.14
AWE-093, No.10
AWE-093, No.9
AWB-030, GND
AWB-030, APC

Parts List of APC Assembly (AWX-124)

COILS

Symbol	Part No.	Description	
L1	ATC-055	EQ Coil	
L2	ATC-056	EQ Coil	
L3	T24-030	Choke Coil	100μH
L4	T24-030	Choke Coil	100μH
L5	T24-030	Choke Coil	100μH
L6	T24-030	Choke Coil	100μH

CAPACITORS

Symbol	Part No.	Description		
C1	CKDYF 103Z 50	Ceramic	0.01	50V
C2	CGB 2R2K 500	Ceramic	2.2p	500V
C3	CKDBC 473Z 25	Ceramic	0.047	25V
C4	CEA 470P 16	Electrolytic	47	16V
C5	CEA 101P 16	Electrolytic	100	16V
C6	CCDCH 150K 50	Ceramic	15p	50V
C7	CCDCH 101K 50	Ceramic	100p	50V
C8	CSZA 2R2M 25	Electrolytic	2.2	25V
C9	CQMA 473K 50	Mylar	0.047	50V
C10	CQMA 103K 50	Mylar	0.01	50V
C11	CKDYB 102K 50	Ceramic	0.001	50V
C12	CEA 101P 6	Electrolytic	100	6V
C13	CCDCH 200K 50	Ceramic	20p	50V
C14	CCDCH 040D 50	Ceramic	4p	50V
C15	CQSA 201J 50	Polystyrene	200p	50V
C16	CCDCH 101K 50	Ceramic	100p	50V
C17	CKDBC 473Z 25	Ceramic	0.047	25V
C18	CKDBC 473Z 25	Ceramic	0.047	25V
C19	ACG-010	Feed-thru ceramic	1000p	500V
C20	ACG-010	Feed-thru ceramic	1000p	500V
C21	ACG-010	Feed-thru ceramic	1000p	500V
C22	ACG-010	Feed-thru ceramic	1000p	500V
C23	ACG-010	Feed-thru ceramic	1000p	500V
C24	ACG-011	Feed-thru ceramic	1p	500V
C25	ACG-010	Feed-thru ceramic	1000p	500V
C26	ACG-010	Feed-thru ceramic	1000p	500V
C27	ACG-010	Feed-thru ceramic	1000p	500V
C28	ACG-010	Feed-thru ceramic	1000p	500V
C29	CCDSL 050D	Ceramic	5p	50V
TC1	ACM-010	Trimmer		

RESISTORS

Symbol	Part No.	Description	
VR1	ACP-006	Semi-fixed	(470-B)
VR2	ACP-031	Semi-fixed	(680-B)
VR3	ACP-031	Semi-fixed	(680-B)

Symbol	Part No.	Description	
R1	RD¼PS 680J	Carbon film	68
R2	RD¼PS 391J	Carbon film	390
R3	RD¼PS 391J	Carbon film	390
R4	RD¼PS 621J	Carbon film	620
R5	RD¼PS 220J	Carbon film	22
R6	RD¼VS 243J	Carbon film	2.4k
R7	RD¼PSF 220J	Carbon film	22
R8	RD¼PS 152J	Carbon film	1.5k
R9	RD¼PS 912J	Carbon film	9.1k
R10	RD¼PS 103J	Carbon film	10k
R11	RD¼PS 242J	Carbon film	2.4k
R12	RD¼PS 243J	Carbon film	24k
R13	RD¼PS 243J	Carbon film	24k
R14	RD¼PS 332J	Carbon film	3.3k
R15	RD¼PS 102J	Carbon film	1k
R16	RD¼PS 101J	Carbon film	100
R17	RD¼PS 3R3J	Carbon film	3.3
R18	RD¼PS 182J	Carbon film	1.8k
R19	RD¼PS 362J	Carbon film	3.6k
R20	RD¼PS 332J	Carbon film	3.3k
R21	RD¼PS 272J	Carbon film	2.7k
R22	RD¼PS 010J	Carbon film	1
R23	RD¼VS 331J	Carbon film	330
R24	RD¼PS 010J	Carbon film	1
R25	RD¼PS 820J	Carbon film	82
R26	RD¼PS 331J	Carbon film	330
R27	RD¼PS 243J	Carbon film	24k
R28	RD¼PS 153J	Carbon film	15k
R29	RD¼PS 333J	Carbon film	33k
R30	RD¼PS 472J	Carbon film	4.7k
R31	RD¼PS 301J	Carbon film	300
R32	RD¼PS 331J	Carbon film	330

OTHERS

Symbol	Part No.	Description
	AKP-023	Crystal resonator socket
	ASR-045	Reed relay

SEMICONDUCTORS

Symbol	Part No.	Description
Q1	2SK 19-BL	FET
Q2	2SC 763-C	Transistor
Q3	2SC 763-C	Transistor
Q4	2SK 19W	FET
Q5	2SA 733-Q or R (2SA 904A-F)	Transistor

Symbol	Part No.	Description
Q6	2SC 945A-Q or R (2SC 1914A-F)	Transistor
Q7	M5S003P	IC
Q8	M53293P	IC
Q9	2SC 461-B	Transistor
Q10	M53273P	IC
Q11	2SA 733-Q or R (2SA 904A-F)	Transistor
D1	STV-4H	Varistor
TH1	22D45	Thermistor
TH2	22D45	Thermistor

Service information will be furnished whenever necessary and you are requested to amend parts number in this parts list.

List of Changed Parts for Factory Modification

Symbol	Part No.	Description

12.7 EQ AMPLIFIER ASSEMBLY (AWF-030)

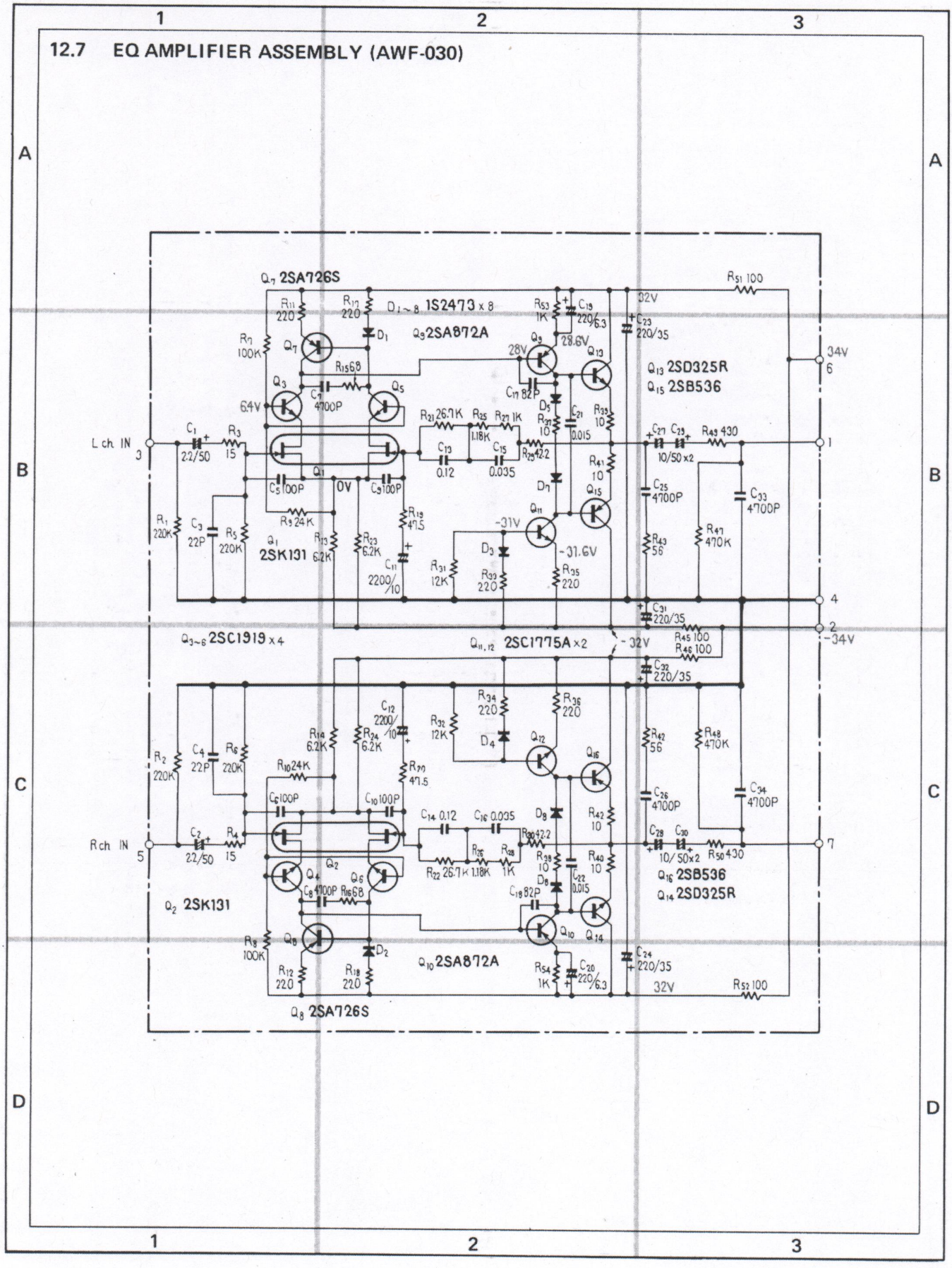

Foil side

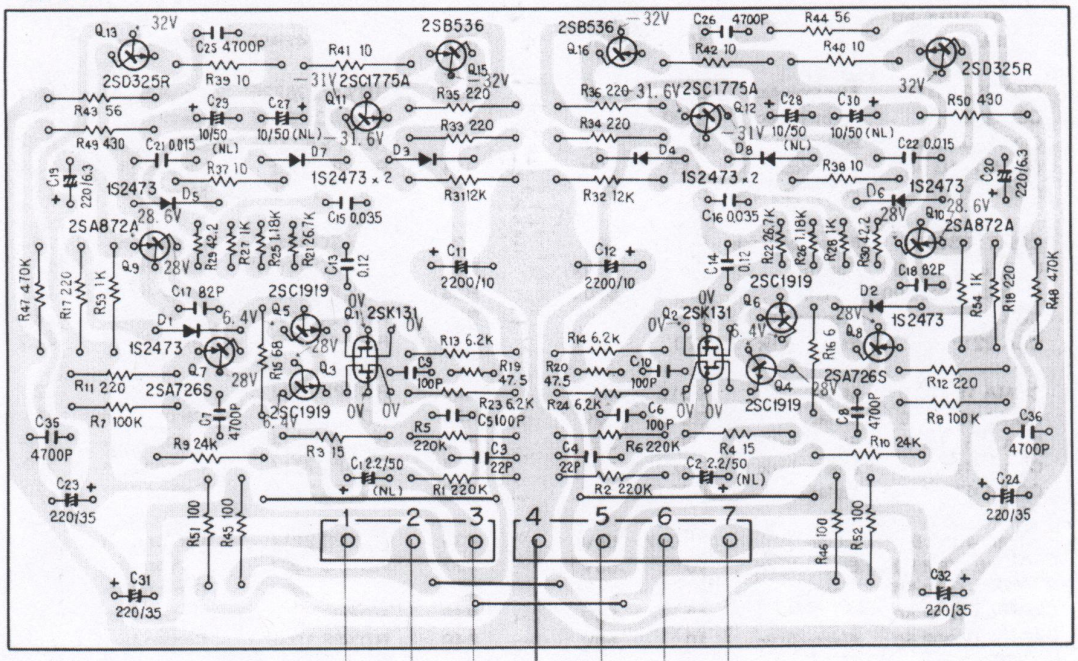
1 2 3 4 5 6 7
2SB536
2SD325R
2SC1775A
2SA872A
2SA726S
2SC1919
2SK131
1S2473
1S2473 x 2
GWS-129, No.15
AWR-154, No.11
AWG-058, No.2
GWS-129, No.19
GWS-129, No.14
AWR-154, No.9
AWG-058, No.4
GWS-129, No.18

Parts List of EQ Amplifier Assembly (AWF-030)

CAPACITORS

Symbol	Part No.	Description		
C1	CEANL 2R2P 50	Electrolytic	2.2	50V
C2	CEANL 2R2P 50	Electrolytic	2.2	50V
C3	CCDSL 220K 50	Ceramic	22p	50V
C4	CCDSL 220K 50	Ceramic	22p	50V
C5	CCDSL 101K 50	Ceramic	100p	50V
C6	CCDSL 101K 50	Ceramic	100p	50V
C7	CQMA 472K 50	Mylar	0.0047	50V
C8	CQMA 472K 50	Mylar	0.0047	50V
C9	CCDSL 101K 50	Ceramic	100p	50V
C10	CCDSL 101K 50	Ceramic	100p	50V
C11	CEA 222P 10	Electrolytic	2200	10V
C12	CEA 222P 10	Electrolytic	2200	10V
C13	CQPA 124G 50	Polypropylene	0.12	50V
C14	CQPA 124G 50	Polypropylene	0.12	50V
C15	CQPA 353G 50	Polypropylene	0.035	50V
C16	CQPA 353G 50	Polypropylene	0.035	50V
C17	CCDSL 820K 500	Ceramic	82p	500V
C18	CCDSL 820K 500	Ceramic	82p	500V
C19	CEA 221P 6	Electrolytic	220	6V
C20	CEA 221P 6	Electrolytic	220	6V
C21	CQMA 153K 50	Mylar	0.015	50V
C22	CQMA 153K 50	Mylar	0.015	50V
C23	CEA 221P 35	Electrolytic	220	35V
C24	CEA 221P 35	Electrolytic	220	35V
C25	CQMA 472K 50	Mylar	0.0047	50V
C26	CQMA 472K 50	Mylar	0.0047	50V
C27	CEANL 100P 50	Electrolytic	10	50V
C28	CEANL 100P 50	Electrolytic	10	50V
C29	CEANL 100P 50	Electrolytic	10	50V
C30	CEANL 100P 50	Electrolytic	10	50V
C31	CEA 221P 35	Electrolytic	220	35V
C32	CEA 221P 35	Electrolytic	220	35V
C33	CQMA 472K 50	Mylar	0.0047	50V
C34	CQMA 472K 50	Mylar	0.0047	50V

RESISTORS

Symbol	Part No.	Description	
R1	RD¼PS 224J NL	Carbon film	220k
R2	RD¼PS 224J NL	Carbon film	220k
R3	RD¼PS 150J	Carbon film	15
R4	RD¼PS 150J	Carbon film	15
R5	RD¼PS 224J NL	Carbon film	220k
R6	RD¼PS 224J NL	Carbon film	220k
R7	RD¼PS 104J NL	Carbon film	100k
R8	RD¼PS 104J NL	Carbon film	100k
R9	RD¼PS 243J	Carbon film	24k
R10	RD¼PS 243J	Carbon film	24k
R11	RD¼PS 221J	Carbon film	220
R12	RD¼PS 221J	Carbon film	220
R13	RD¼PS 622J	Carbon film	6.2k
R14	RD¼PS 622J	Carbon film	6.2k
R15	RD¼PS 680J	Carbon film	68
R16	RD¼PS 680J	Carbon film	68
R17	RD¼PS 221J	Carbon film	220
R18	RD¼PS 221J	Carbon film	220
R19	RN⅕SQ 47R5F	Metal film	47.5 ⅕W
R20	RN⅕SQ 47R5F	Metal film	47.5 ⅕W
R21	RN⅕SQ 2672F	Metal film	26.7k ⅕W
R22	RN⅕SQ 2672F	Metal film	26.7k ⅕W
R23	RD¼PS 622J	Carbon film	6.2k
R24	RD¼PS 622J	Carbon film	6.2k
R25	RN⅕SQ 1181F	Metal film	1.18k ⅕W
R26	RN⅕SQ 1181F	Metal film	1.18k ⅕W
R27	RN⅕SQ 1001F	Metal film	1k ⅕W
R28	RN⅕SQ 1001F	Metal film	1k ⅕W
R29	RN⅕SQ 42R2F	Metal film	42.2 ⅕W
R30	RN⅕SQ 42R2F	Metal film	42.2 ⅕W
R31	RD¼PS 123J	Carbon film	12k
R32	RD¼PS 123J	Carbon film	12k
R33	RD¼PS 221J	Carbon film	220
R34	RD¼PS 221J	Carbon film	220
R35	RD¼PS 221J	Carbon film	220
R36	RD¼PS 221J	Carbon film	220
R37	RD¼PS 100J	Carbon film	10
R38	RD¼PS 100J	Carbon film	10
R39	RD¼PS 100J	Carbon film	10
R40	RD¼PS 100J	Carbon film	10
R41	RD¼PS 100J	Carbon film	10
R42	RD¼PS 100J	Carbon film	10
R43	RD¼PS 560J	Carbon film	56
R44	RD¼PS 560J	Carbon film	56
R45	RD¼PSF 101J	Carbon film	100
R46	RD¼PSF 101J	Carbon film	100
R47	RD¼PS 474J	Carbon film	470k
R48	RD¼PS 474J	Carbon film	470k
R49	RD¼PS 431J	Carbon film	430
R50	RD¼PS 431J	Carbon film	430
R51	RD¼PSF 101J	Carbon film	100
R52	RD¼PSF 101J	Carbon film	100
R53	RD¼PS 102J	Carbon film	1k
R54	RD¼PS 102J	Carbon film	1k

OTHERS

Symbol	Part No.	Description
	AEC-352	Nylon rivet

SEMICONDUCTORS

Symbol	Part No.	Description
Q1	2SK131-L,M or K	FET
Q2	2SK131-L,M or K	FET
Q3	2SC1919-G or F (2SC1400-F or E)	Transistor
Q4	2SC1919-G or F (2SC1400-F or E)	Transistor
Q5	2SC1919-G or F (2SC1400-F or E)	Transistor
Q6	2SC1919-G or F (2SC1400-F or E)	Transistor
Q7	2SA726S-G or F (2SA872A-E or D)	Transistor
Q8	2SA726S-G or F (2SA872A-E or D)	Transistor
Q9	2SA872A-E or D	Transistor
Q10	2SA872A-E or D	Transistor
Q11	2SC1775A-E or D	Transistor
Q12	2SC1775A-E or D	Transistor
Q13	2SD325R-D or E (2SC1913-Q or R)	Transistor
Q14	2SD325R-D or E (2SC1913-Q or R)	Transistor
Q15	2SB536-M or L (2SA913-Q or R)	Transistor
Q16	2SB536-M or L (2SA913-Q or R)	Transistor
D1	1S2473 (1S1555)	Diode
D2	1S2473 (1S1555)	Diode
D3	1S2473 (1S1555)	Diode
D4	1S2473 (1S1555)	Diode
D5	1S2473 (1S1555)	Diode
D6	1S2473 (1S1555)	Diode
D7	1S2473 (1S1555)	Diode
D8	1S2473 (1S1555)	Diode

List of Changed Parts for Factory Modification

Symbol	Part No.	Description

12.8 FUNCTION SELECTOR ASSEMBLY (GWS-129)

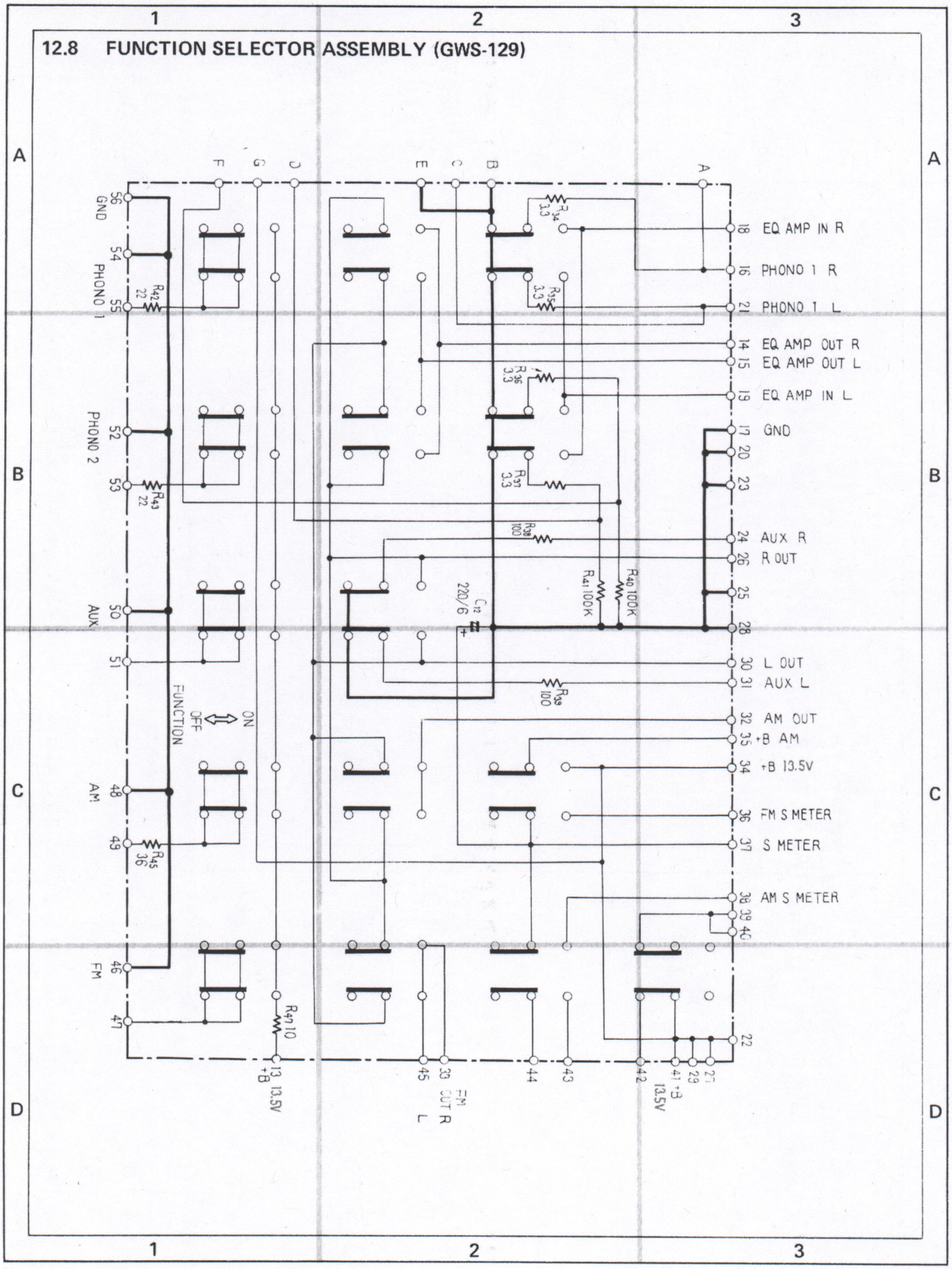

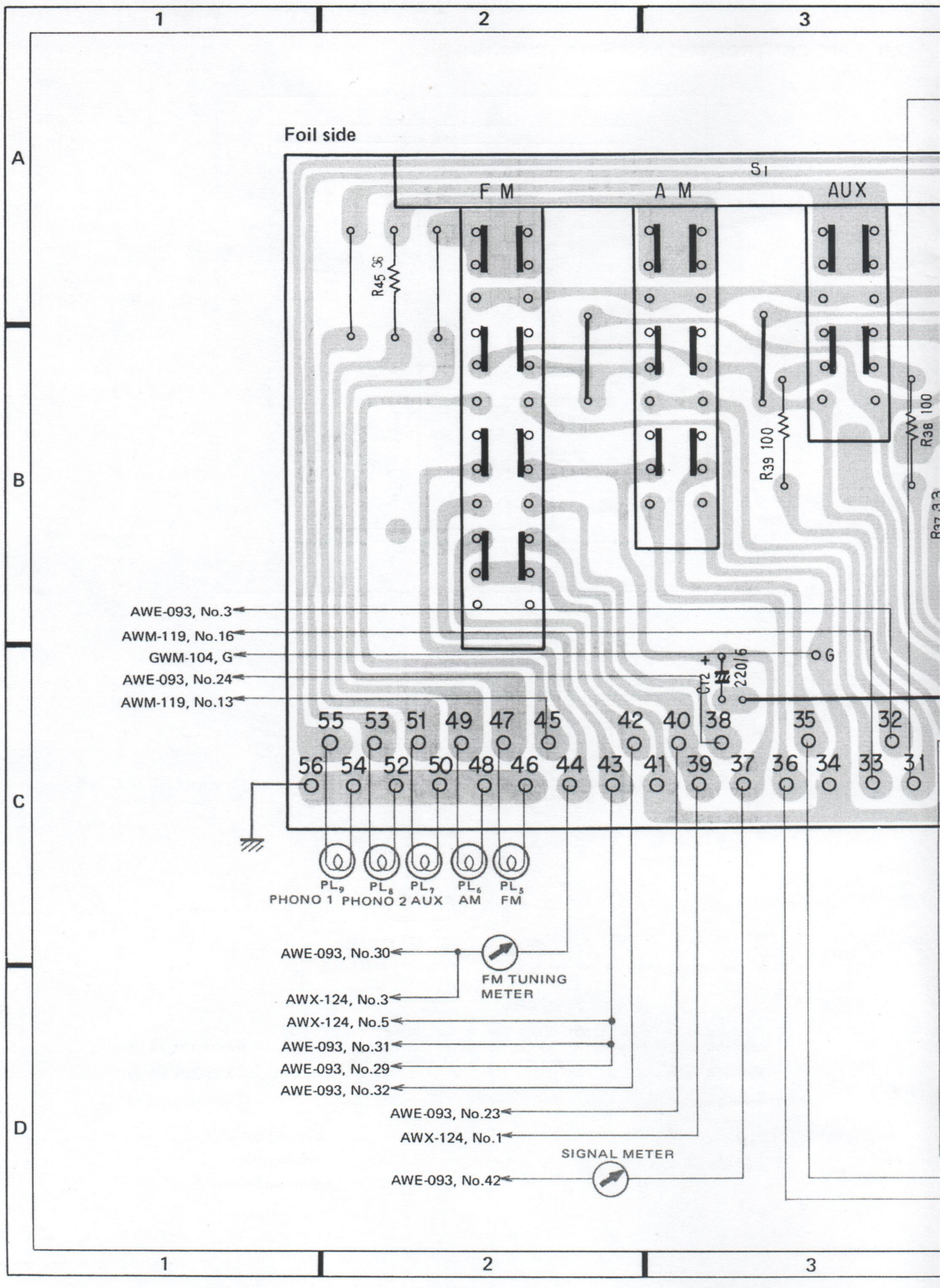
1
2
3
A
B
C
D
Foil side
S1
F M
A M
AUX
R45 36
R39 100
R38 100
AWE-093, No.3
AWM-119, No.16
GWM-104, G
AWE-093, No.24
AWM-119, No.13
G
CT2 220/6
55 53 51 49 47 45 42 40 38 35 32
56 54 52 50 48 46 44 43 41 39 37 36 34 33 31
PL9 PHONO 1
PL8 PHONO 2
PL7 AUX
PL6 AM
PL5 FM
AWE-093, No.30
FM TUNING METER
AWX-124, No.3
AWX-124, No.5
AWE-093, No.31
AWE-093, No.29
AWE-093, No.32
AWE-093, No.23
AWX-124, No.1
SIGNAL METER
AWE-093, No.42

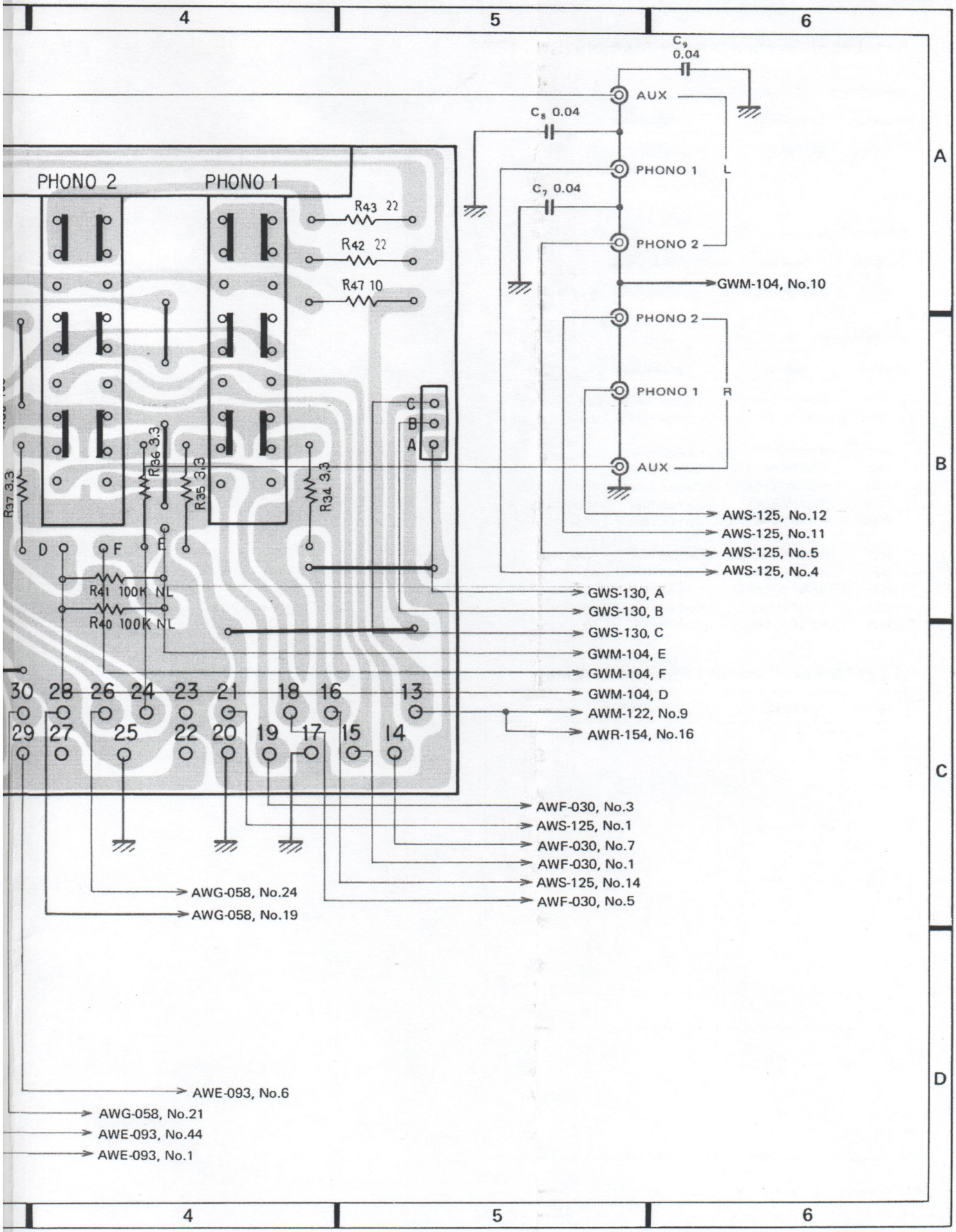
4
5
6
A
B
C
D
PHONO 2
PHONO 1
R43 22
R42 22
R47 10
R37 3.3
R36 3.3
R35 3.3
R34 3.3
R41 100K NL
R40 100K NL
C9 0.04
C8 0.04
C7 0.04
AUX
PHONO 1 L
PHONO 2
PHONO 2
PHONO 1 R
AUX
C
B
A
D
F
E
30 28 26 24 23 21 18 16 13
29 27 25 22 20 19 17 15 14
GWM-104, No.10
AWS-125, No.12
AWS-125, No.11
AWS-125, No.5
AWS-125, No.4
GWS-130, A
GWS-130, B
GWS-130, C
GWM-104, E
GWM-104, F
GWM-104, D
AWM-122, No.9
AWR-154, No.16
AWF-030, No.3
AWS-125, No.1
AWF-030, No.7
AWF-030, No.1
AWS-125, No.14
AWF-030, No.5
AWG-058, No.24
AWG-058, No.19
AWE-093, No.6
AWG-058, No.21
AWE-093, No.44
AWE-093, No.1

Parts List of Function Selector Assembly (GWS-129)

SWITCHES

Symbol	Part No.	Description
S1-5	ASG-126	Push switch (FM, AM, PHONO 2/MIC, PHONO 1)

CAPACITOR

Symbol	Part No.	Description		
C1	CEA 221P 6	Electrolytic	220	6V

RESISTORS

Symbol	Part No.	Description	
R34	RD¼PS 3R3J	Carbon film	3.3
R35	RD¼PS 3R3J	Carbon film	3.3
R36	RD¼PS 3R3J	Carbon film	3.3
R37	RD¼PS 3R3J	Carbon film	3.3
R38	RD¼PS 101J	Carbon film	100
R39	RD¼PS 101J	Carbon film	100
R40	RD¼PS 104J NL	Carbon film	100k
R41	RD¼PS 104J NL	Carbon film	100k
R42	RD¼PS 220J	Carbon film	22
R43	RD¼PS 220J	Carbon film	22
R45	RD¼PS 360J	Carbon film	36
R47	RD¼PS 100J	Carbon film	10

List of Changed Parts for Factory Modification

Symbol	Part No.	Description

12.9 APC CONTROL/MIC ASSEMBLY (GWM-104)

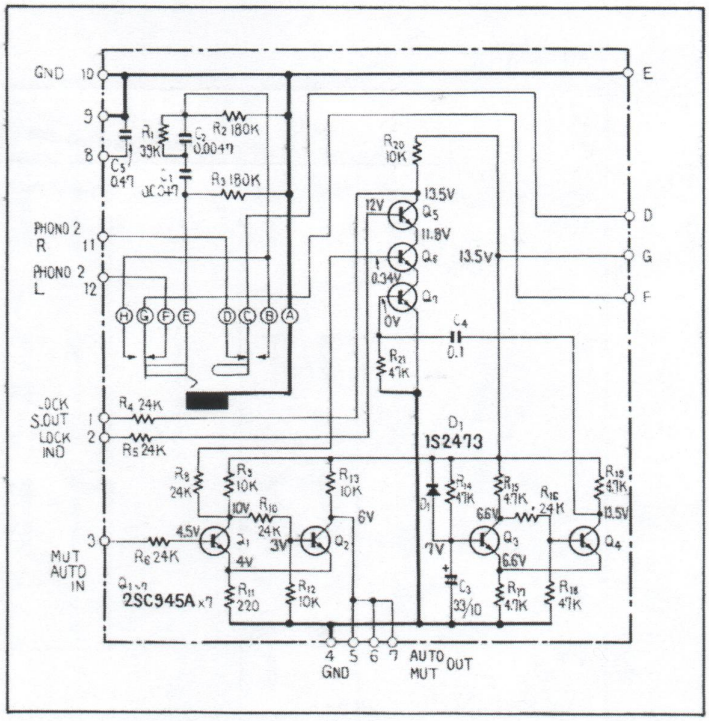

Foil side

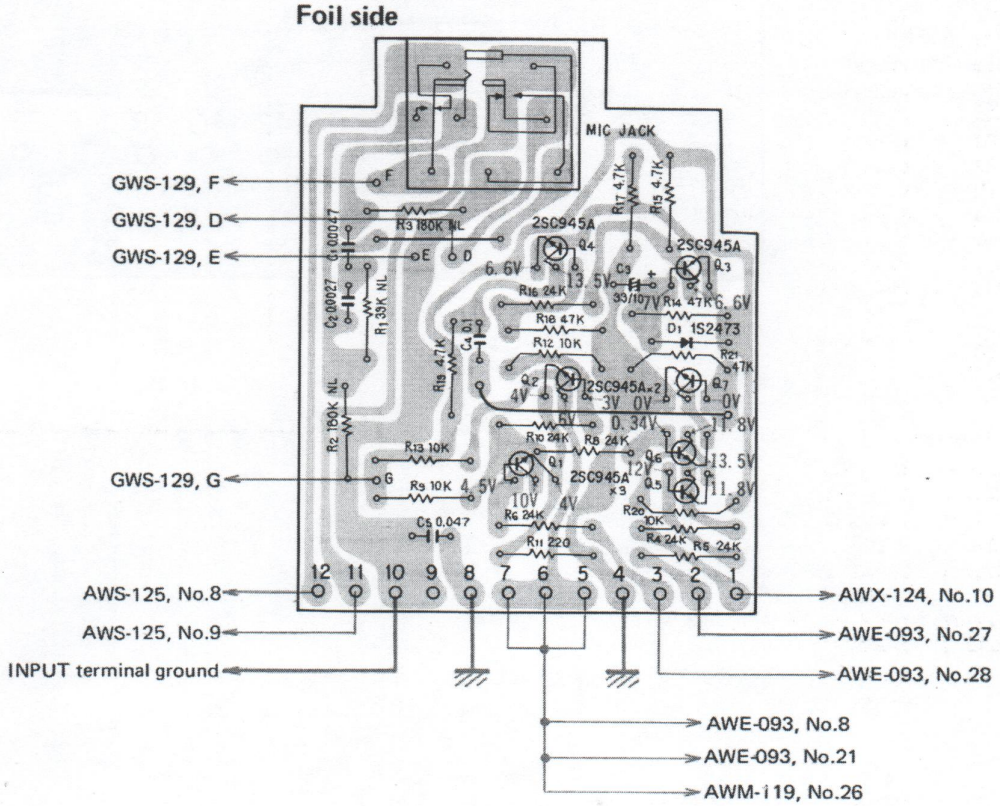

Parts List of APC Control/MIC Assembly (GWM-104)

CAPACITORS

Symbol	Part No.	Description		
C1	CQMA 472K 50	Mylar	0.0047	50V
C2	CQMA 272K 50	Mylar	0.0027	50V
C3	CSZA 330M 10	Electrolytic	33	10V
C4	CQMA 104K 50	Mylar	0.1	50V
C5	CKDYF 473Z 50 (CKDBC 473Z 25)	Ceramic	0.047	50V (25V)

RESISTORS

Symbol	Part No.	Description	
R1	RD¼PS 393J NL	Carbon film	39k
R2	RD¼PS 184J NL	Carbon film	180k
R3	RD¼PS 184J NL	Carbon film	180k
R4	RD¼PS 243J	Carbon film	24k
R5	RD¼PS 243J	Carbon film	24k
R6	RD¼PS 243J	Carbon film	24k
R8	RD¼PS 243J	Carbon film	24k
R9	RD¼PS 103J	Carbon film	10k
R10	RD¼PS 243J	Carbon film	24k
R11	RD¼PS 221J	Carbon film	220
R12	RD¼PS 103J	Carbon film	10k
R13	RD¼PS 103J	Carbon film	10k
R14	RD¼PS 473J	Carbon film	47k
R15	RD¼PS 472J	Carbon film	4.7k
R16	RD¼PS 243J	Carbon film	24k
R17	RD¼PS 472J	Carbon film	4.7k
R18	RD¼PS 473J	Carbon film	47k
R19	RD¼PS 472J	Carbon film	4.7k
R20	RD¼PS 103J	Carbon film	10k
R21	RD¼PS 473J	Carbon film	47k
R42	RD¼PS 100J	Carbon film	10
R43	RD¼PS 100J	Carbon film	10
R44	RD¼PS 100J	Carbon film	10
R45	RD¼PS 100J	Carbon film	10
R46	RD¼PS 100J	Carbon film	10
R47	RD¼PS 100J	Carbon film	10

SEMICONDUCTORS

Symbol	Part No.	Description
Q1	2SC945A-Q or R	Transistor
Q2	2SC945A-Q or R	Transistor
Q3	2SC945A-Q or R	Transistor
Q4	2SC945A-Q or R	Transistor
Q5	2SC945A-Q or R	Transistor
Q6	2SC945A-Q or R	Transistor
Q7	2SC945A-Q or R	Transistor
D1	1S2473	Diode

OTHER

Symbol	Part No.	Description
	AKN-012	Phone jack (MIC)

List of Changed Parts for Factory Modification

Symbol	Part No.	Description

12.10 FLAT AMPLIFIER ASSEMBLY (AWG-058)

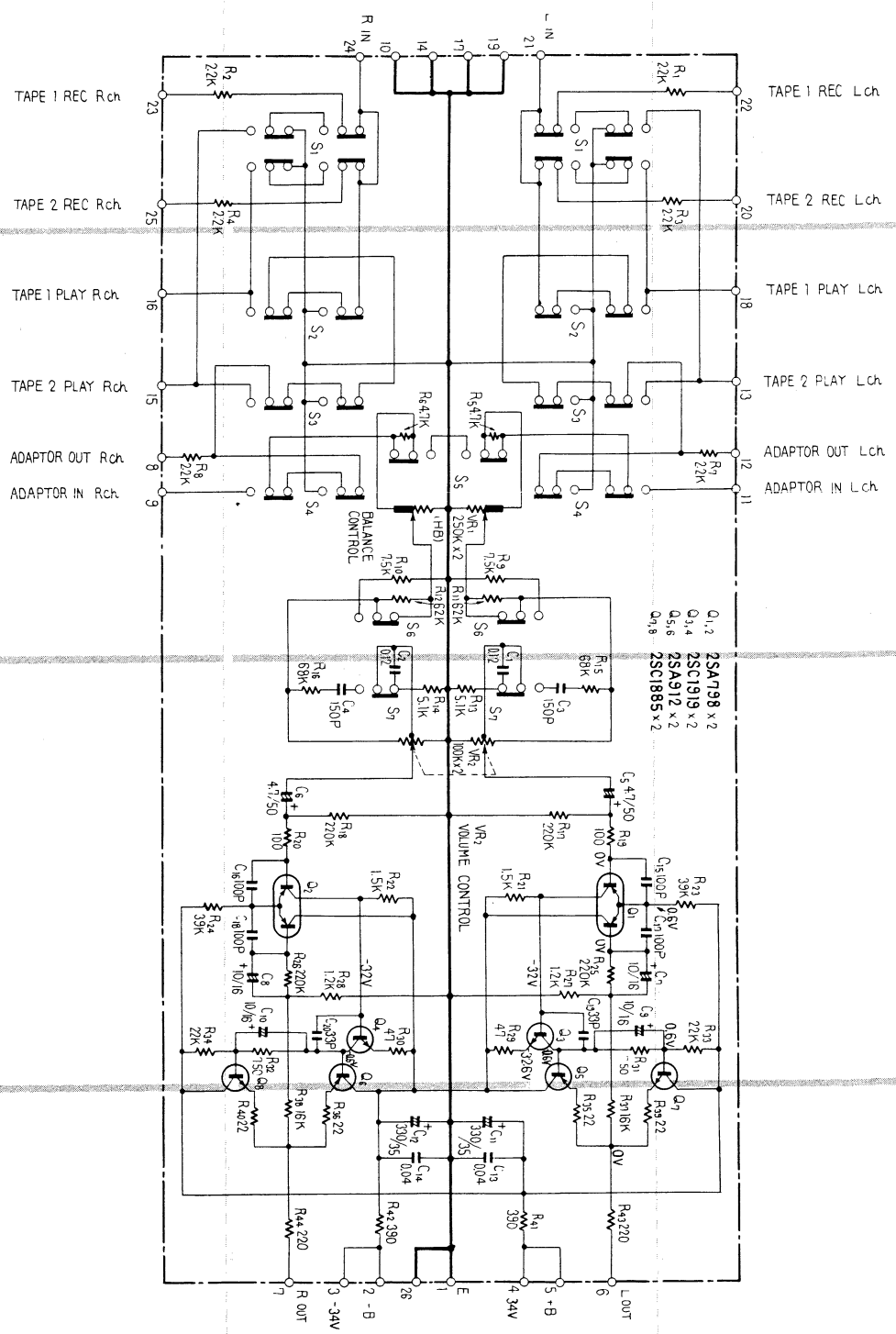

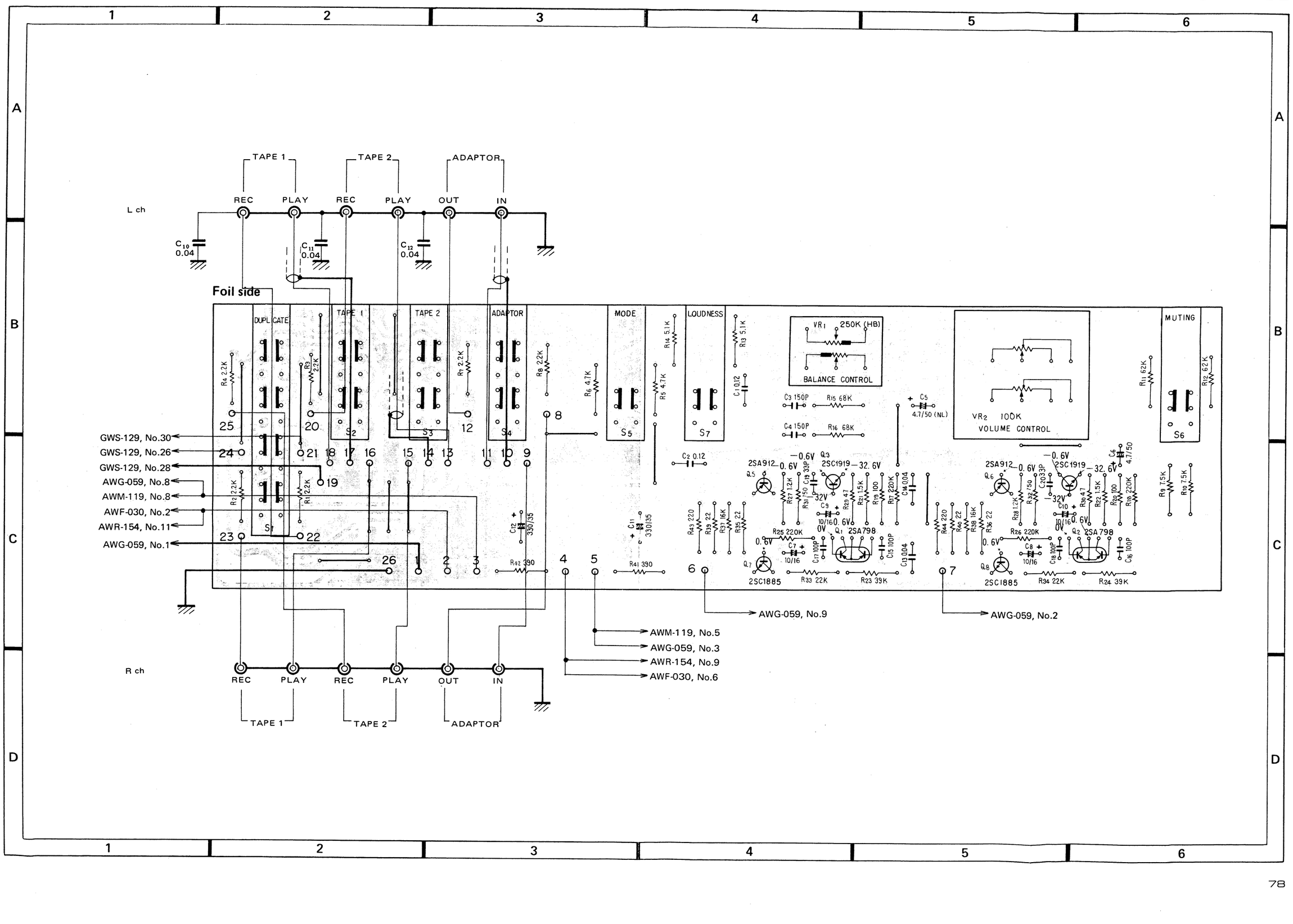
TAPE 1
TAPE 2
ADAPTOR
REC
PLAY
OUT
IN
L ch
R ch
Foil side
DUPLICATE
MODE
LOUDNESS
MUTING
BALANCE CONTROL
VOLUME CONTROL
VR1 250K (HB)
VR2 100K
GWS-129, No.30
GWS-129, No.26
GWS-129, No.28
AWG-059, No.8
AWM-119, No.8
AWF-030, No.2
AWR-154, No.11
AWG-059, No.1
AWG-059, No.9
AWG-059, No.2
AWM-119, No.5
AWG-059, No.3
AWR-154, No.9
AWF-030, No.6

Parts List of Flat Amplifier Assembly (AWG-058)

SWITCHES

Symbol	Part No.	Description
S11	ASK-146	Lever switch (DUPLICATE)
S12	ASK-145	Lever switch (TAPE MONITOR 1)
S13	ASK-145	Lever switch (TAPE MONITOR 2)
S14	ASK-145	Lever switch (ADAPTOR)
S15	ASK-144	Lever switch (MODE)
S16	ASK-144	Lever switch (MUTING)
S17	ASK-144	Lever switch (LOUDNESS)

CAPACITORS

Symbol	Part No.	Description		
C1	CQMA 124K 50	Mylar	0.12	50V
C2	CQMA 124K 50	Mylar	0.12	50V
C3	CQSH 151K 50	Polystyrene	150p	50V
C4	CQSH 151K 50	Polystyrene	150p	50V
C5	CEANL 4R7P 50	Electrolytic	4.7	50V
C6	CEANL 4R7P 50	Electrolytic	4.7	50V
C7	CEA 100P 16	Electrolytic	10	16V
C8	CEA 100P 16	Electrolytic	10	16V
C9	CEA 100P 16	Electrolytic	10	16V
C10	CEA 100P 16	Electrolytic	10	16V
C11	CEA 331P 35	Electrolytic	330	35V
C12	CEA 331P 35	Electrolytic	330	35V
C13	CKDYF 403Z 50	Ceramic	0.04	50V
C14	CKDYF 403Z 50	Ceramic	0.04	50V
C15	CCDSL 101K 50	Ceramic	100p	50V
C16	CCDSL 101K 50	Ceramic	100p	50V
C17	CCDSL 101K 50	Ceramic	100p	50V
C18	CCDSL 101K 50	Ceramic	100p	50V
C19	CCDSL 330K 50	Ceramic	33p	50V
C20	CCDSL 330K 50	Ceramic	33p	50V

RESISTORS

Symbol	Part No.	Description	
VR1	ACV-190	Variable resistor (BALANCE)	
VR2	ACW-116 (ACV-162)	Variable resistor (VOLUME)	
R1	RD¼PS 222J	Carbon film	2.2k
R2	RD¼PS 222J	Carbon film	2.2k
R3	RD¼PS 222J	Carbon film	2.2k
R4	RD¼PS 222J	Carbon film	2.2k
R5	RD¼PS 472J	Carbon film	4.7k
R6	RD¼PS 472J	Carbon film	4.7k
R7	RD¼PS 222J	Carbon film	2.2k
R8	RD¼PS 222J	Carbon film	2.2k
R9	RD¼PS 752J	Carbon film	7.5k
R10	RD¼PS 752J	Carbon film	7.5k
R11	RD¼PS 623J	Carbon film	62k
R12	RD¼PS 623J	Carbon film	62k
R13	RD¼PS 512J	Carbon film	5.1k
R14	RD¼PS 512J	Carbon film	5.1k
R15	RD¼PS 683J	Carbon film	68k
R16	RD¼PS 683J	Carbon film	68k
R17	RD¼PS 224J NL	Carbon film	220k
R18	RD¼PS 224J NL	Carbon film	220k
R19	RD¼PS 101J	Carbon film	100
R20	RD¼PS 101J	Carbon film	100
R21	RD¼PS 152J	Carbon film	1.5k
R22	RD¼ PS 152J	Carbon film	1.5k
R23	RD¼PS 393J	Carbon film	39k
R24	RD¼PS 393J	Carbon film	39k
R25	RD¼PS 224J NL	Carbon film	220k
R26	RD¼PS 224J NL	Carbon film	220k
R27	RD¼PS 122J	Carbon film	1.2k
R28	RD¼PS 122J	Carbon film	1.2k
R29	RD¼PS 470J	Carbon film	47
R30	RD¼PS 470J	Carbon film	47
R31	RD¼PS 751J	Carbon film	750
R32	RD¼PS 751J	Carbon film	750
R33	RD¼PS 223J	Carbon film	22k
R34	RD¼PS 223J	Carbon film	22k
R35	RD¼PS 220J	Carbon film	22
R36	RD¼PS 220J	Carbon film	22
R37	RD¼PS 163J	Carbon film	16k
R38	RD¼PS 163J	Carbon film	16k
R39	RD¼PS 220J	Carbon film	22
R40	RD¼PS 220J	Carbon film	22
R41	RD¼PSF 391J	Carbon film	390
R42	RD¼PSF 391J	Carbon film	390
R43	RD¼PS 221J	Carbon film	220
R44	RD¼PS 221J	Carbon film	220

SEMICONDUCTORS

Symbol	Part No.	Description
Q1	2SA798-G or F	Transistor
Q2	2SA798-G or F	Transistor
Q3	2SC1919-G or F (2SC1400-F or E)	Transistor
Q4	2SC1919-G or F (2SC1400-F or E)	Transistor
Q5	2SA912-R or S (2SA898-V or B)	Transistor
Q6	2SA912-R or S (2SA898-V or B)	Transistor
Q7	2SC1885-R or S (2SC1903-V or B)	Transistor
Q8	2SC1885-R or S (2SC1903-V or B)	Transistor

12.11 TONE CONTROL ASSEMBLY (AWG-059)

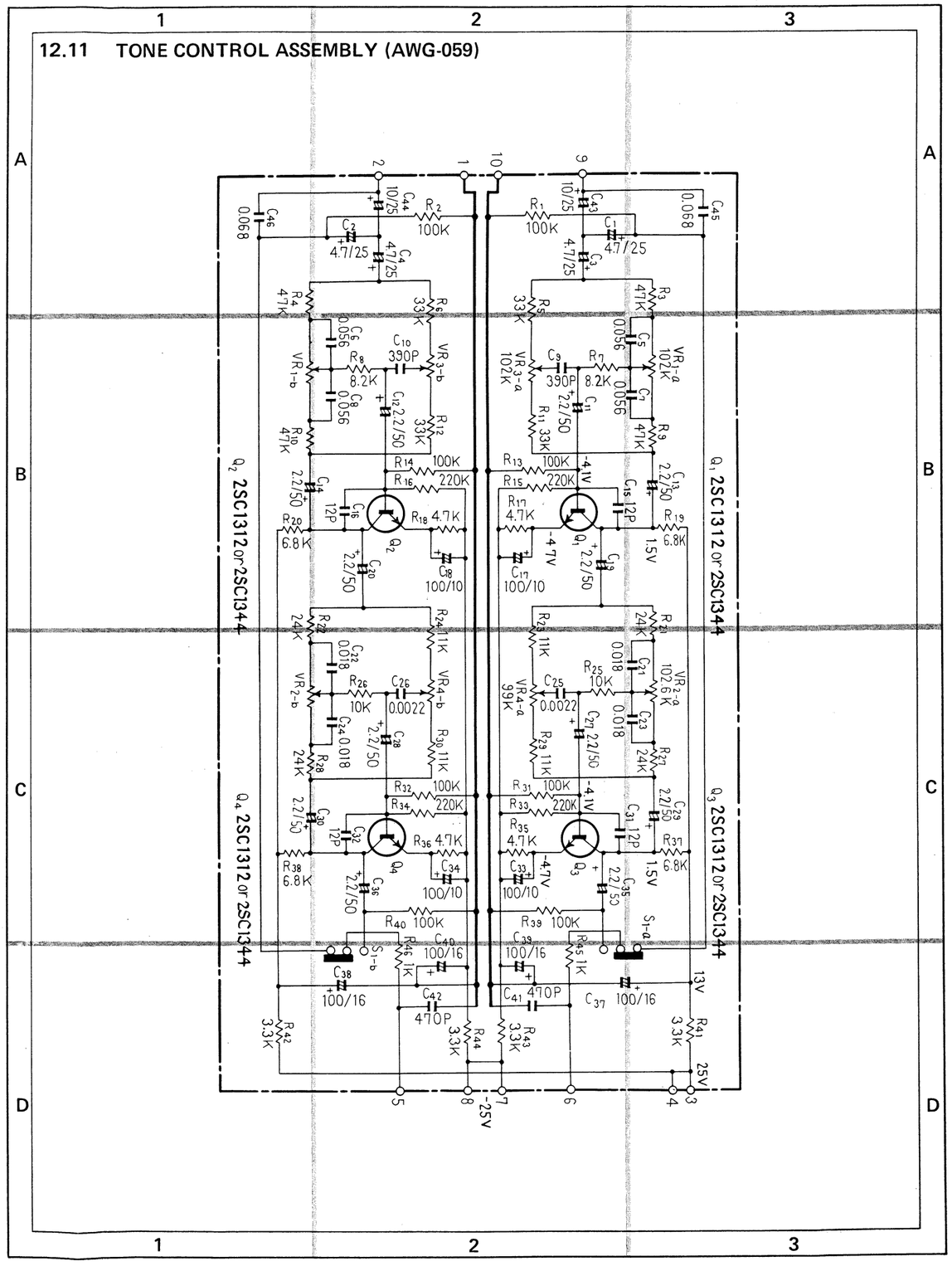

12.11 TONE CONTROL ASSEMBLY (AWG-059)

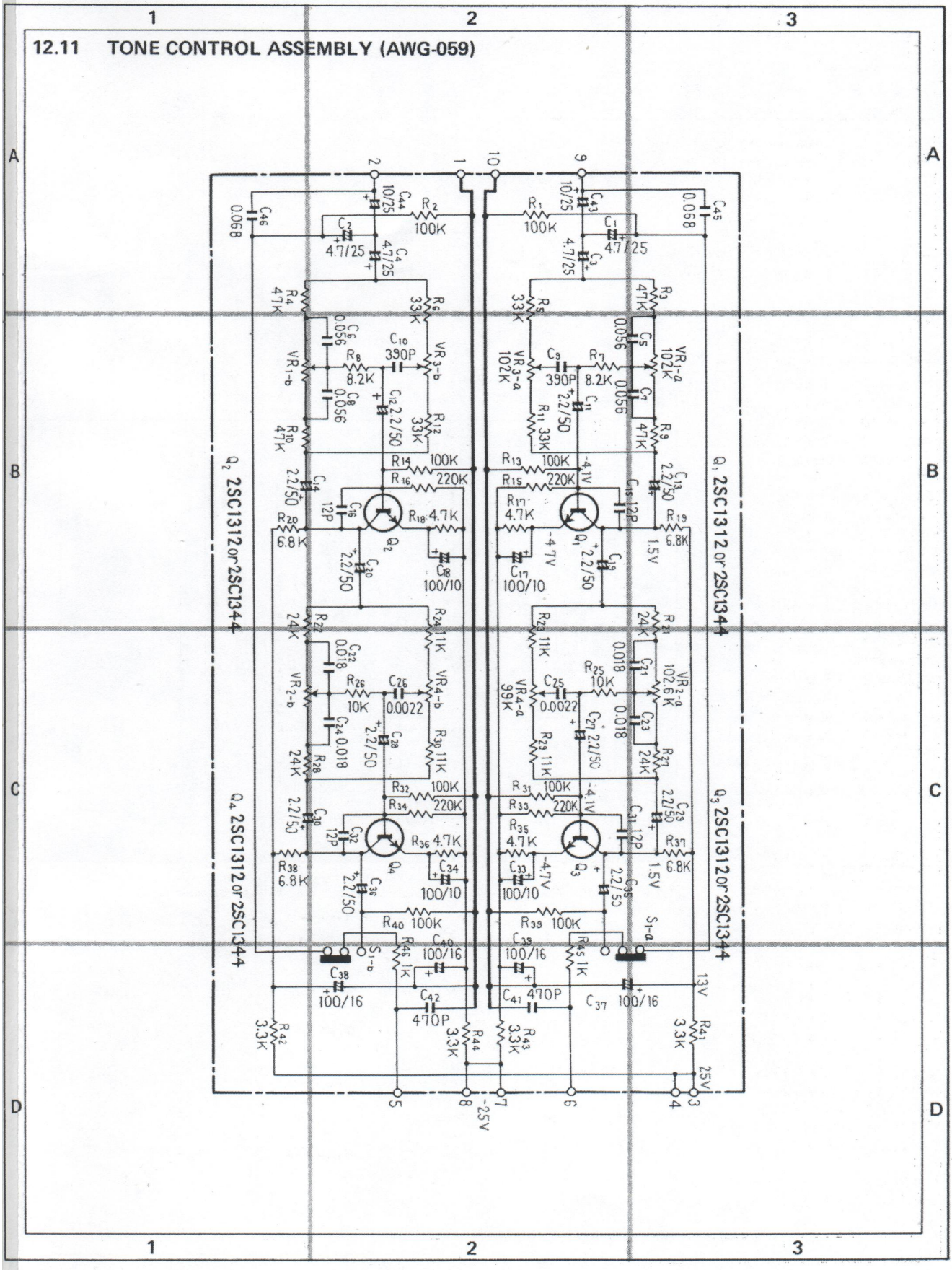

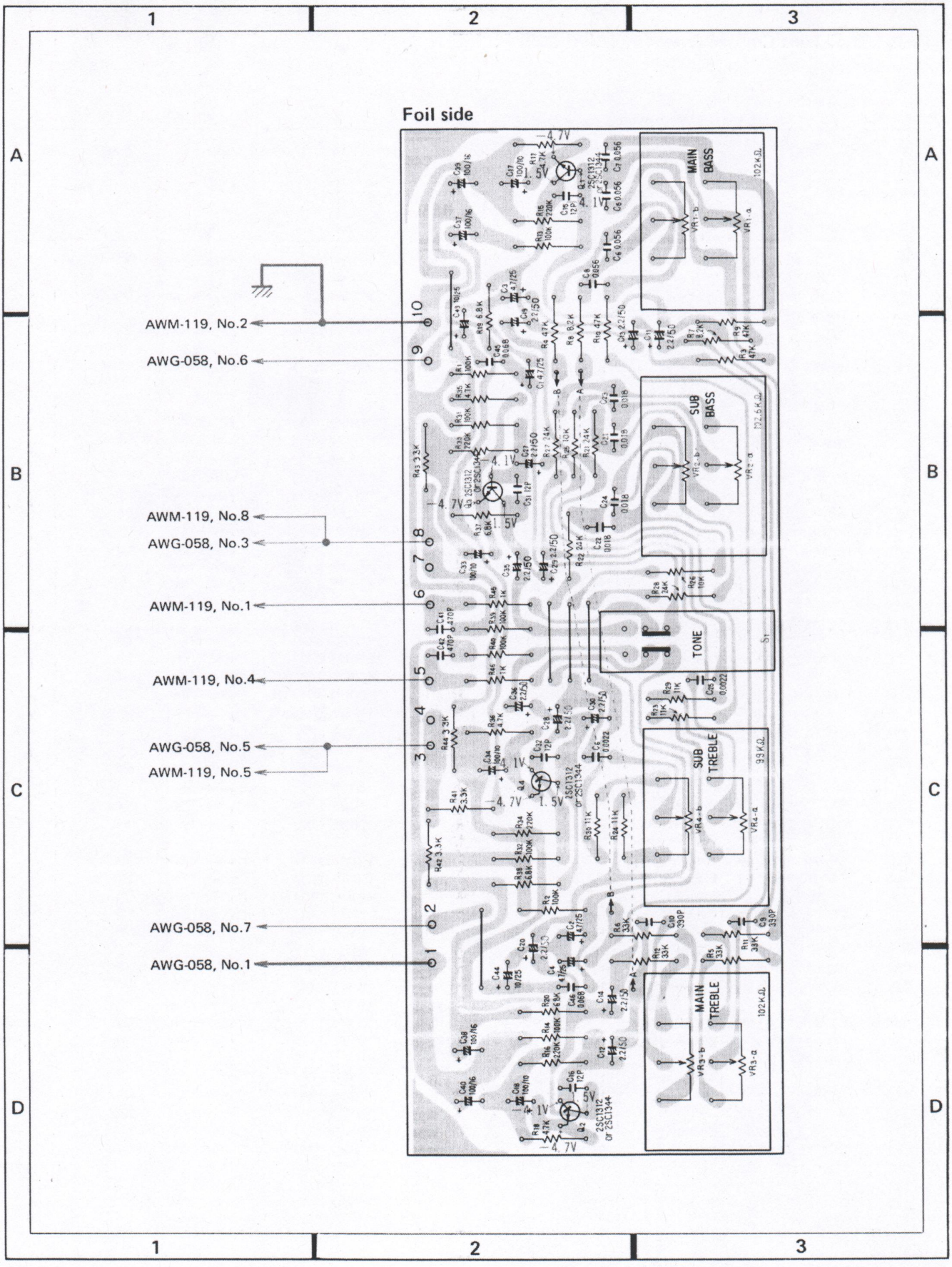
1
2
3
A
B
C
D
Foil side
AWM-119, No.2
AWG-058, No.6
AWM-119, No.8
AWG-058, No.3
AWM-119, No.1
AWM-119, No.4
AWG-058, No.5
AWM-119, No.5
AWG-058, No.7
AWG-058, No.1
MAIN BASS
SUB BASS
TONE
SUB TREBLE
MAIN TREBLE

Parts List of Tone Control Assembly (AWG-059)

SWITCH

Symbol	Part No.	Description
S1	ASK-144	Lever switch (TONE)

CAPACITORS

Symbol	Part No.	Description		
C1	CSZA 4R7M 25	Electrolytic	4.7	25V
C2	CSZA 4R7M 25	Electrolytic	4.7	25V
C3	CSZA 4R7M 25	Electrolytic	4.7	25V
C4	CSZA 4R7M 25	Electrolytic	4.7	25V
C5	CQMA 563J 50	Mylar	0.056	50V
C6	CQMA 563J 50	Mylar	0.056	50V
C7	CQMA 563J 50	Mylar	0.056	50V
C8	CQMA 563J 50	Mylar	0.056	50V
C9	CQSA 391J 50	Polystyrene	390p	50V
C10	CQSA 391J 50	Polystyrene	390p	50V
C11	CEANL 2R2P 50	Electrolytic	2.2	50V
C12	CEANL 2R2P 50	Electrolytic	2.2	50V
C13	CEANL 2R2P 50	Electrolytic	2.2	50V
C14	CEANL 2R2P 50	Electrolytic	2.2	50V
C15	CCDSL 120K 50	Ceramic	12p	50V
C16	CCDSL 120K 50	Ceramic	12p	50V
C17	ACH-312	Electrolytic	100	10V
C18	ACH-312	Electrolytic	100	10V
C19	CEANL 2R2P 50	Electrolytic	2.2	50V
C20	CEANL 2R2P 50	Electrolytic	2.2	50V
C21	CQMA 183J 50	Mylar	0.018	50V
C22	CQMA 183J 50	Mylar	0.018	50V
C23	CQMA 183J 50	Mylar	0.018	50V
C24	CQMA 183J 50	Mylar	0.018	50V
C25	CKDYA 222J 50	Ceramic	2200p	50V
C26	CKDYA 222J 50	Ceramic	2200p	50V
C27	CEANL 2R2P 50	Electrolytic	2.2	50V
C28	CEANL 2R2P 50	Electrolytic	2.2	50V
C29	CEANL 2R2P 50	Electrolytic	2.2	50V
C30	CEANL 2R2P 50	Electrolytic	2.2	50V
C31	CCDSL 120K 50	Ceramic	12p	50V
C32	CCDSL 120K 50	Ceramic	12p	50V
C33	ACH-312	Electrolytic	100	10V
C34	ACH-312	Electrolytic	100	10V
C35	CEANL 2R2P 50	Electrolytic	2.2	50V
C36	CEANL 2R2P 50	Electrolytic	2.2	50V
C37	ACH-311	Electrolytic	100	16V
C38	ACH-311	Electrolytic	100	16V
C39	ACH-311	Electrolytic	100	16V
C40	ACH-311	Electrolytic	100	16V
C41	CKDYB 471K 50	Ceramic	470p	50V
C42	CKDYB 471K 50	Ceramic	470p	50V
C43	CSZA 100M 25	Electrolytic	10	25V
C44	CSZA 100M 25	Electrolytic	10	25V
C45	CQMA 683J 50	Mylar	0.068	50V
C46	CQMA 683J 50	Mylar	0.068	50V

RESISTORS

Symbol	Part No.	Description	
VR1	ACW-101 (ACV-165)	Variable resistor (BASS 50Hz)	
VR2	ACW-102 (ACV-166)	Variable resistor (BASS 100Hz)	
VR3	ACW-104 (ACV-168)	Variable resistor (TREABLE 20kHz)	
VR4	ACW-103 (ACV-167)	Variable resistor (TREABLE 10kHz)	
R1	RD¼PS 104J	Carbon film	100k
R2	RD¼PS 104J	Carbon film	100k
R3	RD¼PS 473J	Carbon film	47k
R4	RD¼PS 473J	Carbon film	47k
R5	RD¼PS 333J	Carbon film	33k
R6	RD¼PS 333J	Carbon film	33k
R7	RD¼PS 822J	Carbon film	8.2k
R8	RD¼PS 822J	Carbon film	8.2k
R9	RD¼PS 473J	Carbon film	47k
R10	RD¼PS 473J	Carbon film	47k
R11	RD¼PS 333J	Carbon film	33k
R12	RD¼PS 333J	Carbon film	33k
R13	RD¼PS 104J NL	Carbon film	100k
R14	RD¼PS 104J NL	Carbon film	100k
R15	RD¼PS 224J NL	Carbon film	220k
R16	RD¼PS 224J NL	Carbon film	220k
R17	RD¼PS 472J	Carbon film	4.7k
R18	RD¼PS 472J	Carbon film	4.7k
R19	RD¼PS 682J	Carbon film	6.8k
R20	RD¼PS 682J	Carbon film	6.8k
R21	RD¼PS 243J	Carbon film	24k
R22	RD¼PS 243J	Carbon film	24k
R23	RD¼PS 113J	Carbon film	11k
R24	RD¼PS 113J	Carbon film	11k
R25	RD¼PS 103J	Carbon film	10k
R26	RD¼PS 103J	Carbon film	10k
R27	RD¼PS 243J	Carbon film	24k
R28	RD¼PS 243J	Carbon film	24k
R29	RD¼PS 113J	Carbon film	11k
R30	RD¼PS 113J	Carbon film	11k
R31	RD¼PS 104J NL	Carbon film	100k
R32	RD¼PS 104J NL	Carbon film	100k
R33	RD¼PS 224J NL	Carbon film	220k
R34	RD¼PS 224J NL	Carbon film	220k
R35	RD¼PS 472J	Carbon film	4.7k
R36	RD¼PS 472J	Carbon film	4.7k
R37	RD¼PS 682J	Carbon film	6.8k

Symbol	Part No.	Description	
R38	RD¼PS 682J	Carbon film	6.8k
R39	RD¼PS 104J	Carbon film	100k
R40	RD¼PS 104J	Carbon film	100k
R41	RD¼PS 332J	Carbon film	3.3k
R42	RD¼PS 332J	Carbon film	3.3k
R43	RD¼PS 332J	Carbon film	3.3k
R44	RD¼PS 332J	Carbon film	3.3k
R45	RD¼PS 102J	Carbon film	1k
R46	RD¼PS 102J	Carbon film	1k

SEMICONDUCTORS

Symbol	Part No.	Description
Q1	2SC 1312-G or H (2SC 1344-E or F)	Transistor
Q2	2SC 1312-G or H (2SC 1344-E or F)	Transistor
Q3	2SC 1312-G or H (2SC 1344-E or F)	Transistor
Q4	2SC 1312-G or H (2SC 1344-E or F)	Transistor

List of Changed Parts for Factory Modification

Symbol	Part No.	Description

12.12 FILTER ASSEMBLY (AWM-119)

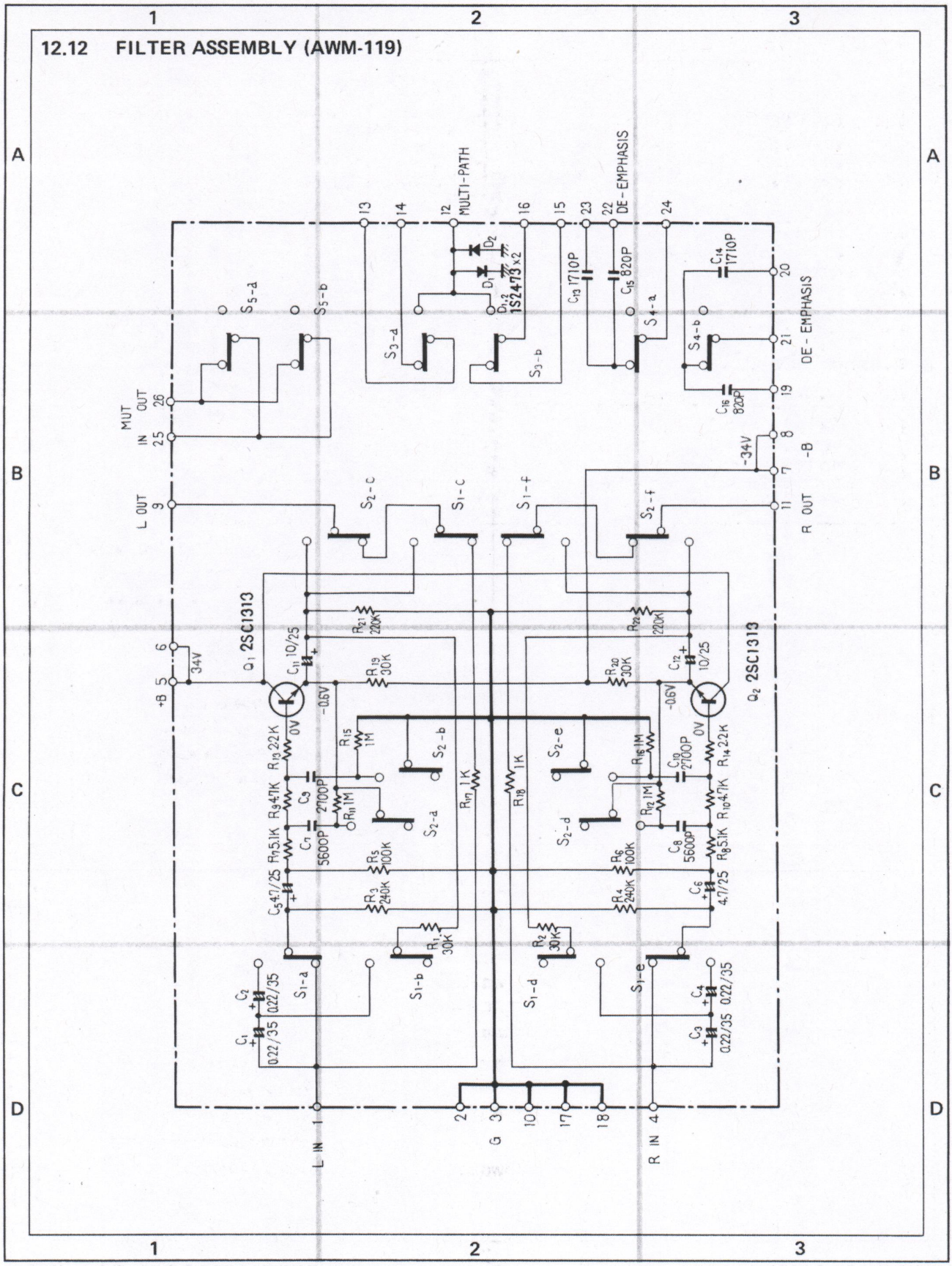

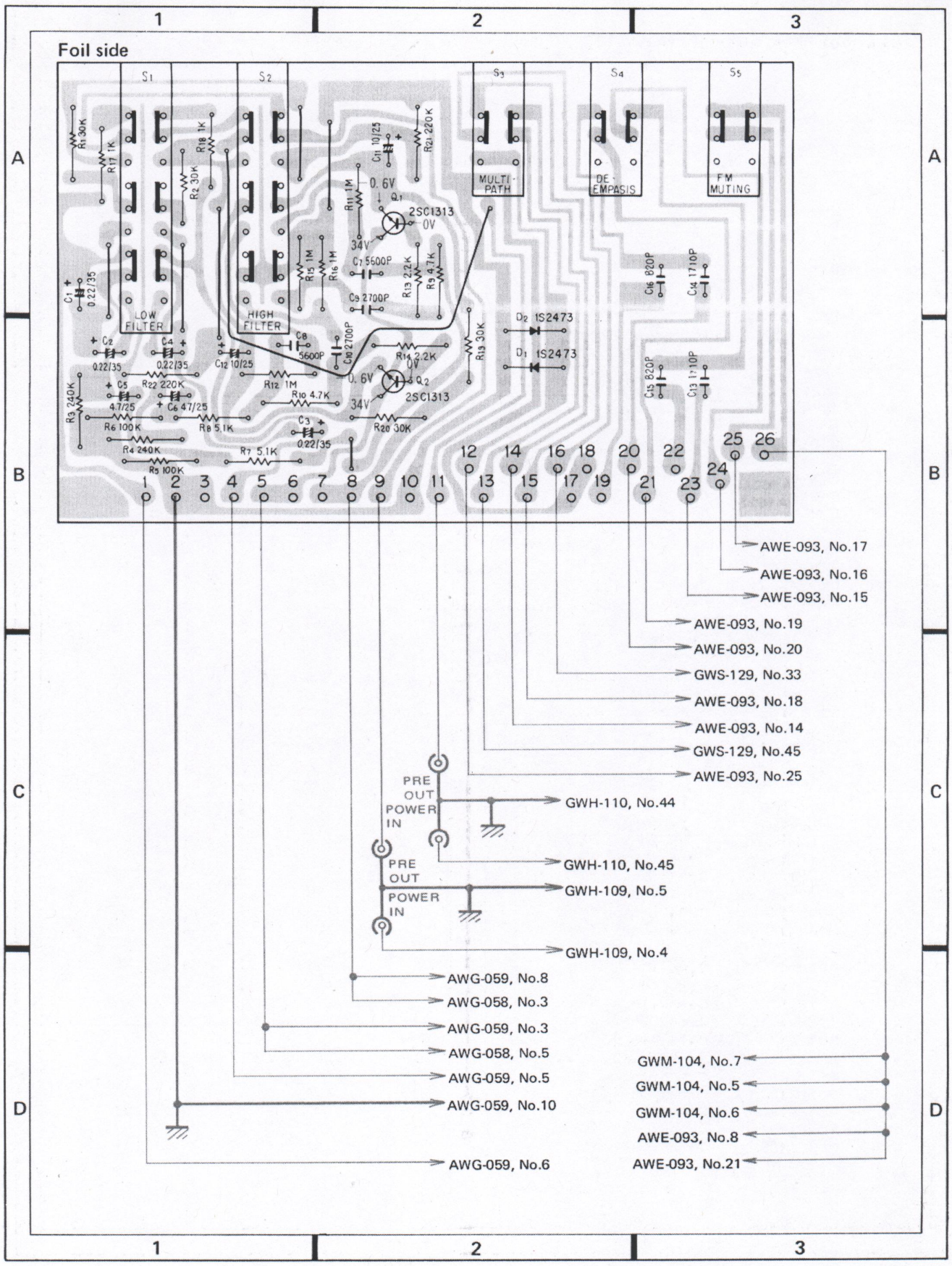
Foil side
S1
S2
S3
S4
S5
LOW FILTER
HIGH FILTER
MULTI-PATH
DE-EMPASIS
FM MUTING
2SC1313
2SC1313
1S2473
1S2473
PRE OUT POWER IN
PRE OUT POWER IN
AWE-093, No.17
AWE-093, No.16
AWE-093, No.15
AWE-093, No.19
AWE-093, No.20
GWS-129, No.33
AWE-093, No.18
AWE-093, No.14
GWS-129, No.45
AWE-093, No.25
GWH-110, No.44
GWH-110, No.45
GWH-109, No.5
GWH-109, No.4
AWG-059, No.8
AWG-058, No.3
AWG-059, No.3
AWG-058, No.5
AWG-059, No.5
AWG-059, No.10
AWG-059, No.6
GWM-104, No.7
GWM-104, No.5
GWM-104, No.6
AWE-093, No.8
AWE-093, No.21

Parts List of Filter Assembly (AWM-119)

SWITCHES

Symbol	Part No.	Description
S1~S5	ASG-127	Push switch (LOW FILTER, HIGH FILTER, MULTI-PATH, DE-EMPHASIS, FM MUTING)

CAPACITORS

Symbol	Part No.	Description		
C1	CSZA R22M 35	Electrolytic	0.22	35V
C2	CSZA R22M 35	Electrolytic	0.22	35V
C3	CSZA R22M 35	Electrolytic	0.22	35V
C4	CSZA R22M 35	Electrolytic	0.22	35V
C5	CSZA 4R7M 25	Electrolytic	4.7	25V
C6	CSZA 4R7M 25	Electrolytic	4.7	25V
C7	CKDYA 562J 50 (CQMA 562J 50)	Ceramic (Mylar)	0.0056	50V
C8	CKDYA 562J 50 (CQMA 562J 50)	Ceramic (Mylar)	0.0056	50V
C9	CKDYA 272J 50 (CQMA 272J 50)	Ceramic (Mylar)	0.0027	50V
C10	CKDYA 272J 50 (CQMA 272J 50)	Ceramic (Mylar)	0.0027	50V
C11	CSZA 100M 25	Electrolytic	10	25V
C12	CSZA 100M 25	Electrolytic	10	25V
C13	ACE-043	Polystyrene	1710p	50V
C14	ACE-043	Polystyrene	1710p	50V
C15	CQSA 821G 50	Polystyrene	820p	50V
C16	CQSA 821G 50	Polystyrene	820p	50V

RESISTORS

Symbol	Part No.	Description	
R1	RD¼PS 303J	Carbon film	30k
R2	RD¼PS 303J	Carbon film	30k
R3	RD¼PS 244J NL	Carbon film	240k
R4	RD¼PS 244J NL	Carbon film	240k
R5	RD¼PS 104J NL	Carbon film	100k
R6	RD¼PS 104J NL	Carbon film	100k
R7	RD¼PS 512J	Carbon film	5.1k
R8	RD¼PS 512J	Carbon film	5.1k
R9	RD¼PS 472J	Carbon film	4.7k
R10	RD¼PS 472J	Carbon film	4.7k
R11	RD¼PS 105J	Carbon film	1M
R12	RD¼PS 105J	Carbon film	1M
R13	RD¼PS 222J	Carbon film	2.2k
R14	RD¼PS 222J	Carbon film	2.2k
R15	RD¼PS 105J	Carbon film	1M
R16	RD¼PS 105J	Carbon film	1M
R17	RD¼PS 102J	Carbon film	1k
R18	RD¼PS 102J	Carbon film	1k
R19	RD¼PS 303J	Carbon film	30k
R20	RD¼PS 303J	Carbon film	30k
R21	RD¼PS 224J	Carbon film	220k
R22	RD¼PS 224J	Carbon film	220k

SEMICONDUCTORS

Symbol	Part No.	Description
Q1	2SC 1313-G or F	Transistor
Q2	2SC 1313-G or F	Transistor
D1	1S 2473	Diode
D2	1S 2473	Diode

List of Changed Parts for Factory Modification

Symbol	Part No.	Description

12.13 RECTIFIER L ASSEMBLY (GWR-106)

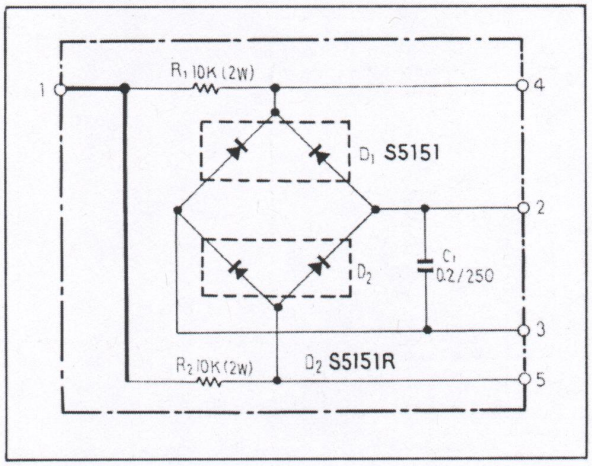

Parts List

CAPACITOR

Symbol	Part No.	Description		
C1	CQMA 204J 250	Mylar	0.2	250V

RESISTORS

Symbol	Part No.	Description		
R1	RS2P 103J	Metal oxide	10k	2W
R2	RS2P 103J	Metal oxide	10k	2W

SEMICONDUCTORS

Symbol	Part No.	Description
D1	S5151	Diode
D2	S5151R	Diode

Foil side

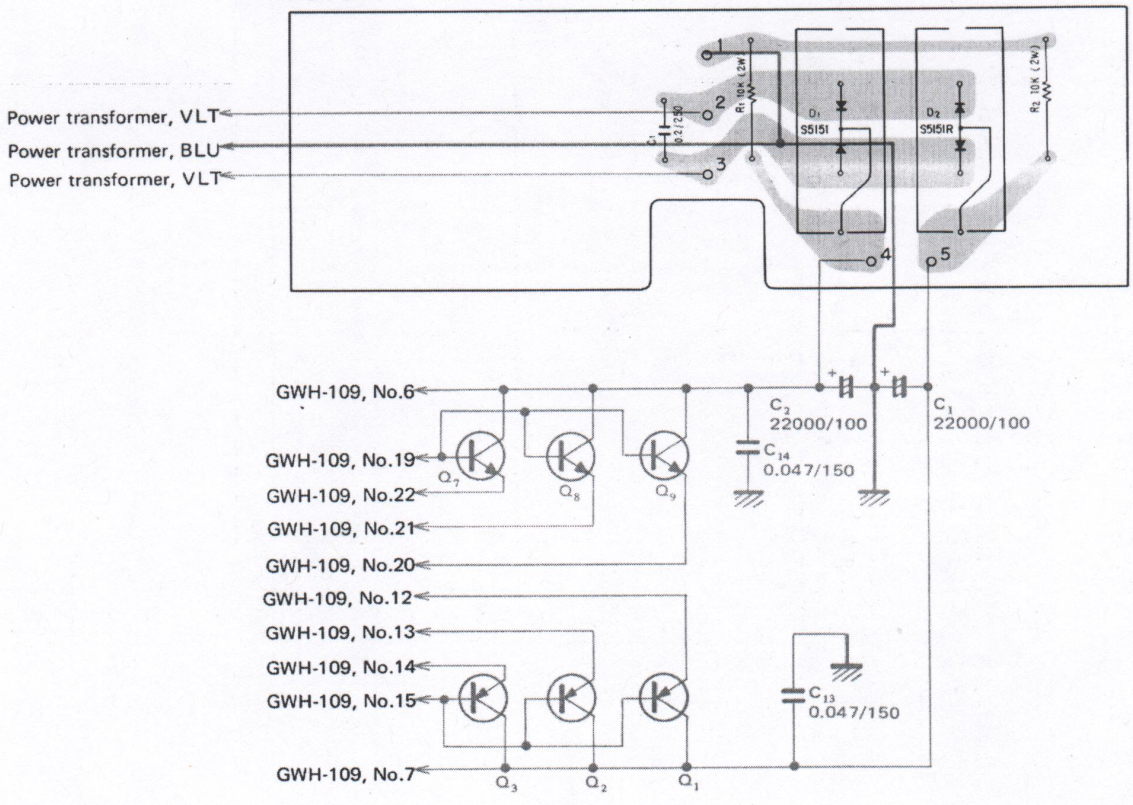

12.14 POWER AMPLIFIER L ASSEMBLY (GWH-109)

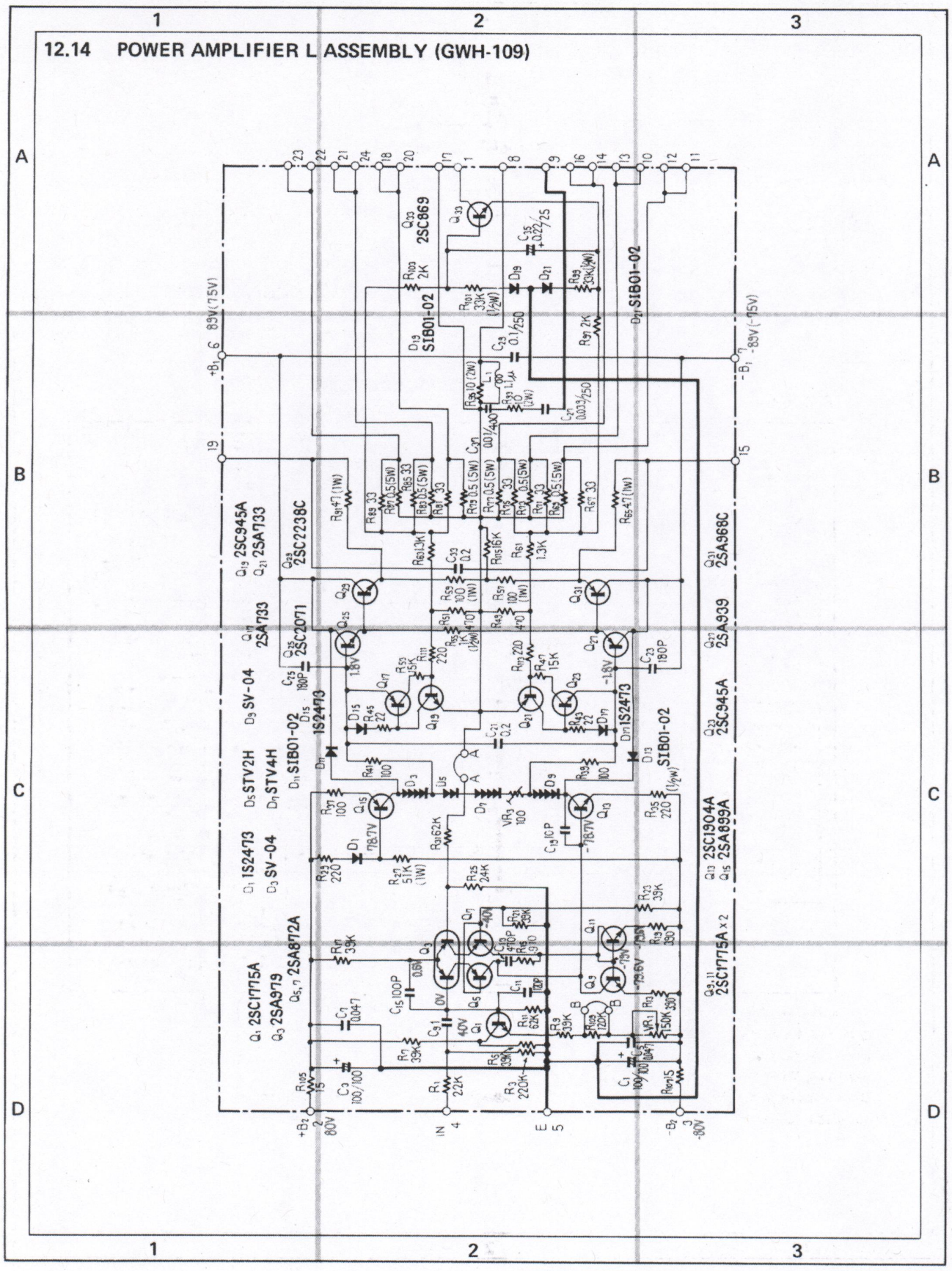

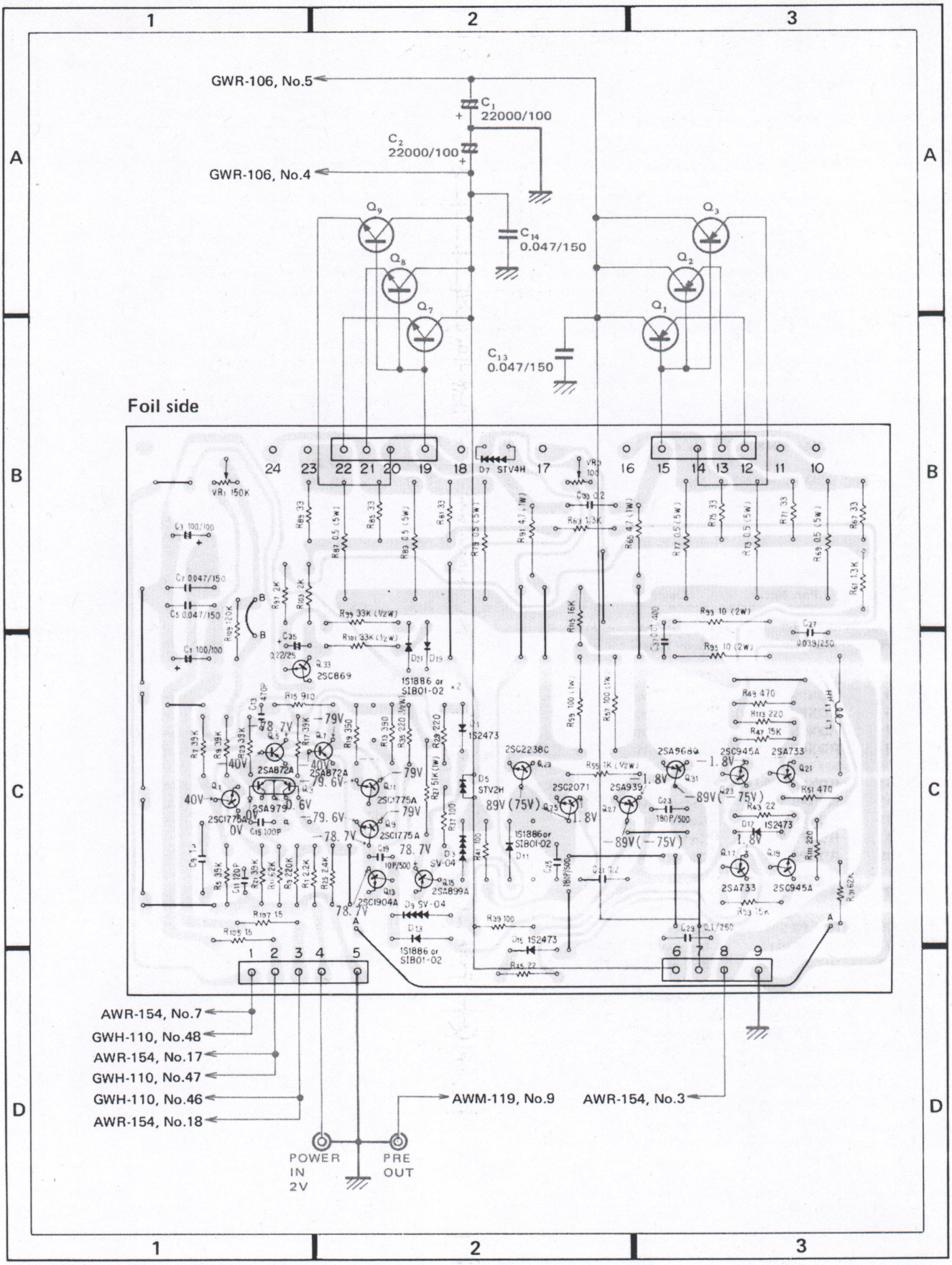
GWR-106, No.5
GWR-106, No.4
C1 22000/100
C2 22000/100
C14 0.047/150
C13 0.047/150
Foil side
AWR-154, No.7
GWH-110, No.48
AWR-154, No.17
GWH-110, No.47
GWH-110, No.46
AWR-154, No.18
AWM-119, No.9
AWR-154, No.3
POWER IN 2V
PRE OUT

Parts List of Power Amplifier L Assembly (GWH-109)

CAPACITORS

Symbol	Part No.	Description		
C1	CEA 101P 100	Electrolytic	100	100V
C3	CEA 101P 100	Electrolytic	100	100V
C5	ACG-009	Ceramic	0.047	150V
C7	ACG-009	Ceramic	0.047	150V
C9	ACE-008	Metallized mylar	1	100V
C11	CCDSL 121K 50	Ceramic	120p	50V
C13	CCDSL 471K 50	Ceramic	470p	50V
C15	CCDSL 101K 50	Ceramic	100p	50V
C17				
C19	CCDSL 100K 500	Ceramic	10p	500V
C21	CQMA 204K 50	Mylar	0.2	50V
C23	CCDSL 181K 500	Ceramic	180p	500V
C25	CCDSL 181K 500	Ceramic	180p	500V
C27	CQMA 393K 250	Mylar	0.039	250V
C29	CQMA 104K 250	Mylar	0.1	250V
C33	CQMA 204K 50	Mylar	0.2	50V
C35	CSSA R22M 25	Electrolytic	0.22	25V
C37	CQMA 103K 40	Mylar	0.01	400V

RESISTORS

Symbol	Part No.	Description		
VR1	ACP-063	Semi-fixed	(150k-B)	
VR3	ACP-032	Semi-fixed	(100-B)	
R1	RD¼PS 222J	Carbon film	2.2k	
R3	RD¼PS 224J NL	Carbon film	220k	
R5	RD¼PS 393J NL	Carbon film	39k	
R7	RD¼PS 393J NL	Carbon film	39k	
R9	RD¼PS 393J NL	Carbon film	39k	
R11	RD¼PS 623J NL	Carbon film	62k	
R13	RD¼PS 391J	Carbon film	390	
R15	RD¼PS 911J	Carbon film	910	
R17	RD¼PS 393J NL	Carbon film	39k	
R19	RD¼PS 391J	Carbon film	390	
R21	RD¼PS 393J NL	Carbon film	39k	
R23	RD¼PS 393J NL	Carbon film	39k	
R25	RD¼PS 242J	Carbon film	2.4k	
R27	RS1P 513J	Metal oxide	51k	1W
R29	RD¼PSF 221J	Carbon film	220	
R31	RD¼PS 623J NL	Carbon film	62k	
R35	RD½PSF 221J	Carbon film	220	½W
R37	RD¼PSF 101J	Carbon film	100	
R39	RD¼PSF 101J	Carbon film	100	
R41	RD¼PSF 101J	Carbon film	100	
R43	RD¼PSF 220J	Carbon film	22	
R45	RD¼PSF 220J	Carbon film	22	
R47	RD¼PS 153J	Carbon film	15k	
R49	RD¼PSF 471J	Carbon film	470	
R51	RD¼PSF 471J	Carbon film	470	
R53	RD¼PS 153J	Carbon film	15k	
R55	RD½PSF 102J	Carbon film	1k	½W
R57	RS1PS 101J	Metal oxide	100	1W
R59	RS1PS 101J	Metal oxide	100	1W
R61	RD¼PSF 132J	Carbon film	1.3k	
R63	RD¼PSF 132J	Carbon film	1.3k	
R65	RN1H 4R7K	Metal film	4.7	1W
R67	RD¼PSF 330J	Carbon film	33	
R69	RT5B 0R5K	Wire wound	0.5	5W
R71	RD¼PSF 330J	Carbon film	33	
R73	RT5B 0R5K	Wire wound	0.5	5W
R75	RD¼PSF 330J	Carbon film	33	
R77	RT5B 0R5K	Wire wound	0.5	5W
R79	RT5B 0R5K	Wire wound	0.5	5W
R81	RD¼PSF 330J	Carbon film	33	
R83	RT5B 0R5K	Wire wound	0.5	5W
R85	RD¼PSF 330J	Carbon film	33	
R87	RT5B 0R5K	Wire wound	0.5	5W
R89	RD¼PSF 330J	Carbon film	33	
R91	RN1H 4R7K	Metal film	4.7	1W
R93	RS2P 100J	Metal oxide	10	2W
R95	RS2P 100J	Metal oxide	10	2W
R97	RD¼PSF 202J	Carbon film	2k	
R99	RD½PS 333J	Carbon film	33k	½W
R101	RD½PS 333J	Carbon film	33k	½W
R103	RD¼PSF 202J	Carbon film	2k	
R105	RD¼PSF 150J	Carbon film	15	
R107	RD¼PSF 150J	Carbon film	15	
R109	RD¼PS 124J	Carbon film	120k	
R111	RD¼PSF 221J	Carbon film	220	
R113	RD¼PSF 221J	Carbon film	220	
R115	RD¼PS 163J	Carbon film	16k	

OTHERS

Symbol	Part No.	Description	
L1	ATH-012	Choke coil	1.1μH
	ANH-340	Heat sink	
	AKM-034	4P plug	

SEMICONDUCTORS

Symbol	Part No.	Description
Q1	2SC 1775A-E	Transistor
Q3	2SA 979-F	Transistor
Q5	2SA 872A-E or D	Transistor
Q7	2SA 872A-E or D	Transistor
Q9	2SC 1775A-F or E	Transistor
Q11	2SC 1775A-F or E	Transistor
Q13	2SC 1904A-V or B	Transistor
Q15	2SA 899A-V or B	Transistor
Q17	2SA 733-Q or R	Transistor
Q19	2SC 945A-Q or R	Transistor
Q21	2SA 733-Q or R	Transistor
Q23	2SC 945A-Q or R	Transistor
Q25	2SC 2071-V or B	Transistor
Q27	2SA 939-V or B	Transistor
Q29	2SC 2238C-O or Y	Transistor
Q31	2SA 968C-O or Y	Transistor
Q33	2SC 869-C or D	Transistor
D1	1S 2473 (1S 1555)	Diode
D3	SV-04	Varistor
D5	STV-2H	Varistor
D7	STV-4H	Varistor
D9	SV-04	Varistor
D11	SIB 01-02 (1S 1886)	Diode
D13	SIB 01-02 (1S 1886)	Diode
D15	1S 2473 (1S 1555)	Diode
D17	1S 2473 (1S 1555)	Diode
D19	SIB 01-02 (1S 1886)	Diode
D21	SIB 01-02 (IS 1886)	Diode

List of Changed Parts for Factory Modification

Symbol	Part No.	Description

12.15 POWER AMPLIFIER R ASSEMBLY (GWH-110)

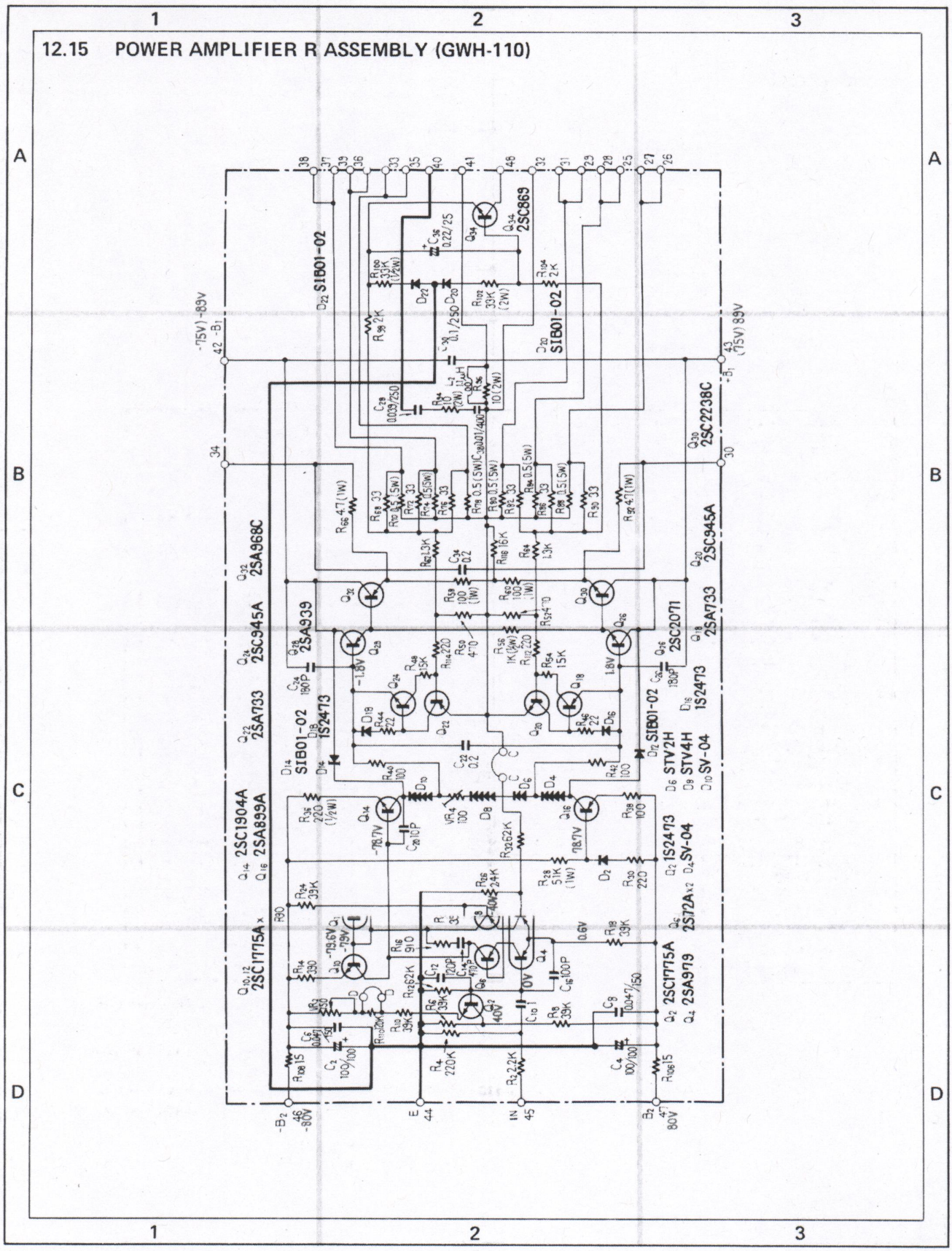

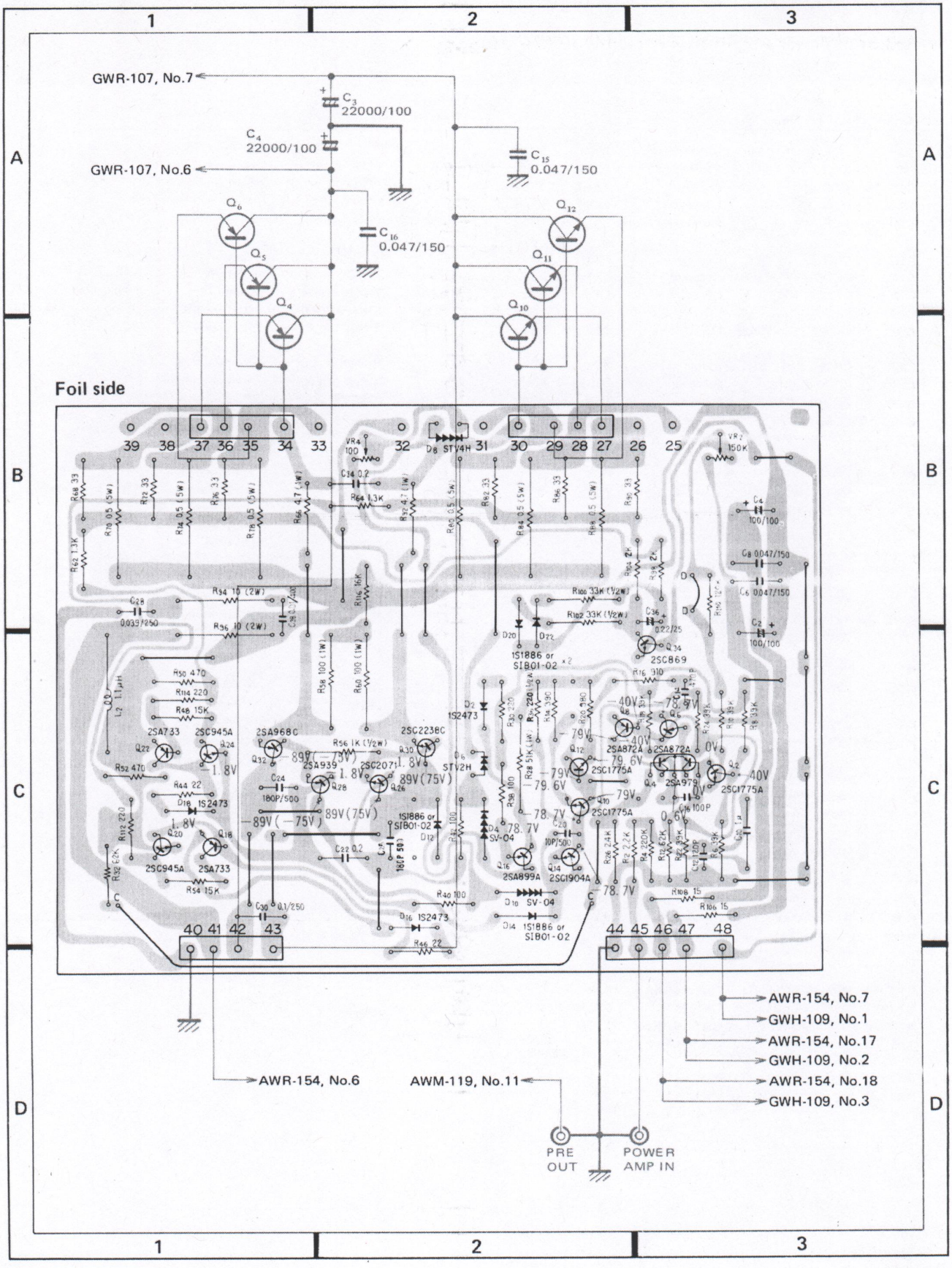
GWR-107, No.7
GWR-107, No.6
Foil side
AWR-154, No.6
AWM-119, No.11
PRE OUT
POWER AMP IN
AWR-154, No.7
GWH-109, No.1
AWR-154, No.17
GWH-109, No.2
AWR-154, No.18
GWH-109, No.3

Parts List of Power Amplifier R Assembly (GWH-110)

CAPACITORS

Symbol	Part No.	Description		
C2	CEA 101P 100	Electrolytic	100	100V
C4	CEA 101P 100	Electrolytic	100	100V
C6	ACG-009	Ceramic	0.047	150V
C8	ACG-009	Ceramic	0.047	150V
C10	ACE-008	Metallized mylar	1	100V
C12	CCDSL 121K 50	Ceramic	120p	50V
C14	CCDSL 471K 50	Ceramic	470p	50V
C16	CCDSL 101K 50	Ceramic	100p	50V
C18				
C20	CCDSL 100K 500	Ceramic	10p	500V
C22	CQMA 204K 50	Mylar	0.2	50V
C24	CCDSL 181K 500	Ceramic	180p	500V
C26	CCDSL 181K 500	Ceramic	180p	500V
C28	CQMA 393K 250	Mylar	0.039	250V
C30	CQMA 104K 250	Mylar	0.1	250V
C34	CQMA 204K 50	Mylar	0.2	50V
C36	CSSA R22M 25	Electrolytic	0.22	25V
C38	CQMA 103K 400	Mylar	0.01	400V

RESISTORS

Symbol	Part No.	Description		
VR2	ACP-063	Semi-fixed	(150k-B)	
VR4	ACP-032	Semi-fixed	(100-B)	
R2	RD¼PS 222J	Carbon film	2.2k	
R4	RD½PS 224J NL	Carbon film	220k	
R6	RD¼PS 393J NL	Carbon film	39k	
R8	RD¼PS 393J NL	Carbon film	39k	
R10	RD¼PS 393J NL	Carbon film	39k	
R12	RD¼PS 623J NL	Carbon film	62k	
R14	RD¼PS 391J	Carbon film	390	
R16	RD¼PS 911J	Carbon film	910	
R18	RD¼PS 393J NL	Carbon film	39k	
R20	RD¼PS 391J	Carbon film	390	
R22	RD¼PS 393J NL	Carbon film	39k	
R24	RD¼PS 393J NL	Carbon film	39k	
R26	RD¼PS 242J	Carbon film	2.4k	
R28	RS1P 513J	Metal oxide	51k	
R30	RD¼PSF 221J	Carbon film	220	
R32	RD¼PS 623J NL	Carbon film	62k	
R36	RD½PSF 221J	Carbon film	220	½W
R38	RD¼PSF 101J	Carbon film	100	
R40	RD¼PSF 101J	Carbon film	100	
R42	RD¼PSF 101J	Carbon film	100	
R44	RD¼PSF 220J	Carbon film	22	
R46	RD¼PSF 220J	Carbon film	22	
R48	RD¼PS 153J	Carbon film	15k	
R50	RD¼PSF 471J	Carbon film	470	
R52	RD¼PSF 471J	Carbon film	470	
R54	RD¼PS 153J	Carbon film	15k	
R56	RD½PSF 102J	Carbon film	1k	½W
R58	RS1PS 101J	Metal oxide	100	1W
R60	RS1PS 101J	Metal oxide	100	1W
R62	RD¼PSF 132J	Carbon film	1.3k	
R64	RD¼PSF 132J	Carbon film	1.3k	
R66	RN1H 4R7K	Metal film	4.7	1W
R68	RD¼PSF 330J	Carbon film	33	
R70	RT5B 0R5K	Wire wound	0.5	5W
R72	RD¼PSF 330J	Carbon film	33	
R74	RT5B 0R5K	Wire wound	0.5	5W
R76	RD¼PSF 330J	Carbon film	33	
R78	RT5B 0R5K	Wire wound	0.5	5W
R80	RT5B 0R5K	Wire wound	0.5	5W
R82	RD¼PSF 330J	Carbon film	33	
R84	RT5B 0R5K	Wire wound	0.5	5W
R86	RD¼PSF 330J	Carbon film	33	
R88	RT5B 0R5K	Wire wound	0.5	5W
R90	RD¼PSF 330J	Carbon film	33	
R92	RN1H 4R7K	Metal film	4.7	1W
R94	RS2P 100J	Metal oxide	10	2W
R96	RS2P 100J	Metal oxide	10	2W
R98	RD¼PSF 202J	Carbon film	2k	
R100	RD½PS 333J	Carbon film	33k	½W
R102	RD½PS 333J	Carbon film	33k	½W
R104	RD¼PSF 202J	Carbon film	2k	
R106	RD¼PSF 150J	Carbon film	15	
R108	RD¼PSF 150J	Carbon film	15	
R110	RD¼PS 124J	Carbon film	120k	
R112	RD¼PSF 221J	Carbon film	220	
R114	RD¼PSF 221J	Carbon film	220	
R116	RD¼PS 163J	Carbon film	16k	

OTHERS

Symbol	Part No.	Description	
L2	ATH-012	Choke coil	1.1μH
	ANH-340	Heat sink	
	AKM-034	4P plug	

SEMICONDUCTORS

Symbol	Part No.	Description
Q2	2SC 1775A-E	Transistor
Q4	2SA 979-F	Transistor
Q6	2SA 872A-E or D	Transistor
Q8	2SA 872A-E or D	Transistor
Q10	2SC 1775A-F or E	Transistor
Q12	2SC 1775A-F or E	Transistor
Q14	2SC 1904A-V or B	Transistor
Q16	2SA 899A-V or B	Transistor
Q18	2SA 733-Q or R	Transistor
Q20	2SC 945A-Q or R	Transistor
Q22	2SA 733-Q or R	Transistor
Q24	2SC 945A-Q or R	Transistor
Q26	2SC 2071-V or B	Transistor
Q28	2SA 939-V or B	Transistor
Q30	2SC 2238C-O or Y	Transistor
Q32	2SA 698C-O or Y	Transistor
Q34	2SC 869-C or D	Transistor
D2	1S 2473 (1S 1555)	Diode
D4	SV-04	Varistor
D6	STV-2H	Varistor
D8	STV-4H	Varistor
D10	SV-04	Varistor
D12	SIB 01-02 (1S 1886)	Diode
D14	SIB 01-02 (1S 1886)	Diode
D16	1S 2473 (1S 1555)	Diode
D18	1S 2473 (1S 1555)	Diode
D20	SIB 01-02 (1S 1886)	Diode
D22	SIB 01-02 (1S 1886)	Diode

List of Changed Parts for Factory Modification

Symbol	Part No.	Description

12.16 METER AMPLIFIER ASSEMBLY (AWM-122)

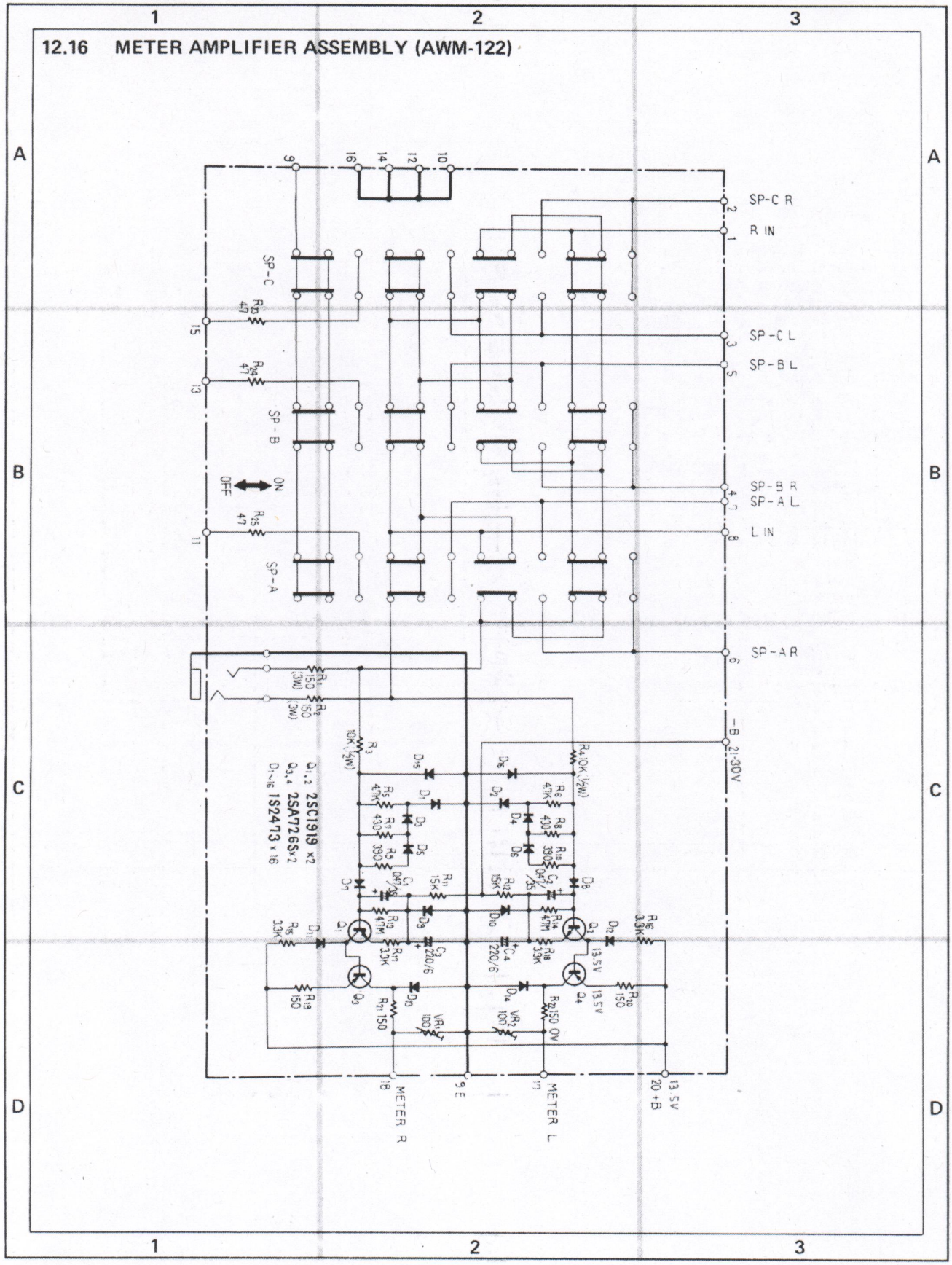

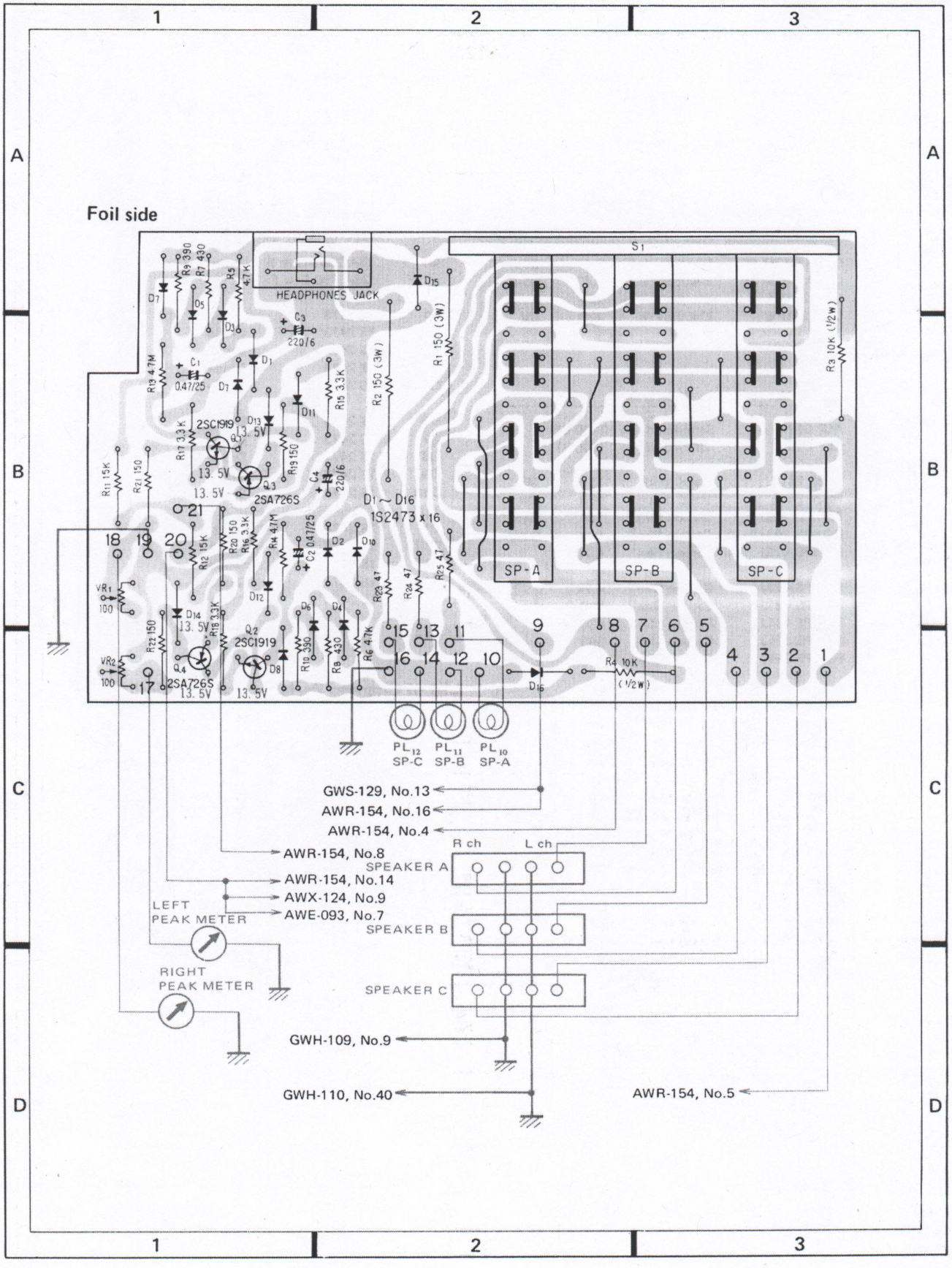
1
2
3
A
B
C
D
Foil side
HEADPHONES JACK
S1
SP-A
SP-B
SP-C
D1 ~ D16
1S2473 x 16
2SC1919
2SA726S
13.5V
PL12 SP-C
PL11 SP-B
PL10 SP-A
GWS-129, No.13
AWR-154, No.16
AWR-154, No.4
AWR-154, No.8
AWR-154, No.14
AWX-124, No.9
AWE-093, No.7
R ch
L ch
SPEAKER A
SPEAKER B
SPEAKER C
LEFT PEAK METER
RIGHT PEAK METER
GWH-109, No.9
GWH-110, No.40
AWR-154, No.5

Parts List of Meter Amplifier Assembly (AWM-122)

SWITCHES

Symbol	Part No.	Description
S22-24	ASG-130	Push switch (SPEAKERS)

CAPACITORS

Symbol	Part No.	Description		
C1	CSZA R47M 35	Electrolytic	0.47	35V
C2	CSZA R47M 35	Electrolytic	0.47	35V
C3	CEA 221P 6	Electrolytic	220	6V
C4	CEA 221P 6	Electrolytic	220	6V

RESISTORS

Symbol	Part No.	Description		
VR1	ACP-019	Semi-fixed	(100-B)	
VR2	ACP-019	Semi-fixed	(100-B)	
R1	RS3P 151J	Metal oxide	150	3W
R2	RS3P 151J	Metal oxide	150	3W
R3	RD½PS 103J	Carbon film	10k	½W
R4	RD½PS 103J	Carbon film	10k	½W
R5	RD¼PS 472J	Carbon film	4.7k	
R6	RD¼PS 472J	Carbon film	4.7k	
R7	RD¼PS 431J	Carbon film	430	
R8	RD¼PS 431J	Carbon film	430	
R9	RD¼PS 391J	Carbon film	390	
R10	RD¼PS 391J	Carbon film	390	
R11	RD¼PS 153J	Carbon film	15k	
R12	RD¼PS 153J	Carbon film	15k	
R13	RD¼PS 475J	Carbon film	4.7M	
R14	RD¼PS 475J	Carbon film	4.7M	
R15	RD¼PS 332J	Carbon film	3.3k	
R16	RD¼PS 332J	Carbon film	3.3k	
R17	RD¼PS 332J	Carbon film	3.3k	
R18	RD¼PS 332J	Carbon film	3.3k	
R19	RD¼PSF 151J	Carbon film	150	
R20	RD¼PSF 151J	Carbon film	150	
R21	RD¼PSF 151J	Carbon film	150	
R22	RD¼PSF 151J	Carbon film	150	
R23	RD¼PS 470J	Carbon film	47	
R24	RD¼PS 470J	Carbon film	47	
R25	RD½PS 470J	Carbon film	47	

OTHER

Symbol	Part No.	Description
	AKN-010	Phone Jack (PHONES)

SEMICONDUCTORS

Symbol	Part No.	Description
Q1	2SC 1919-G or F (2SC 1400-E or F)	Transistor
Q2	2SC 1919-G or F (2SC 1400-E or F)	Transistor
Q3	2SA 726S-G or F (2SA 750-E or F)	Transistor
Q4	2SA 726S-G or F (2SA 750-E or F)	Transistor
Q1	1S 2473	Diode
Q2	1S 2473	Diode
Q3	1S 2473	Diode
Q4	1S 2473	Diode
Q5	1S 2473	Diode
Q6	1S 2473	Diode
Q7	1S 2473	Diode
Q8	1S 2473	Diode
Q9	1S 2473	Diode
Q10	1S 2473	Diode
Q11	1S 2473	Diode
Q12	1S 2473	Diode
Q13	1S 2473	Diode
Q14	1S 2473	Diode
Q15	1S 2473	Diode
Q16	1S 2473	Diode

List of Changed Parts for Factory Modification

Symbol	Part No.	Description

12.17 RECTIFIER R ASSEMBLY (GWR-107)

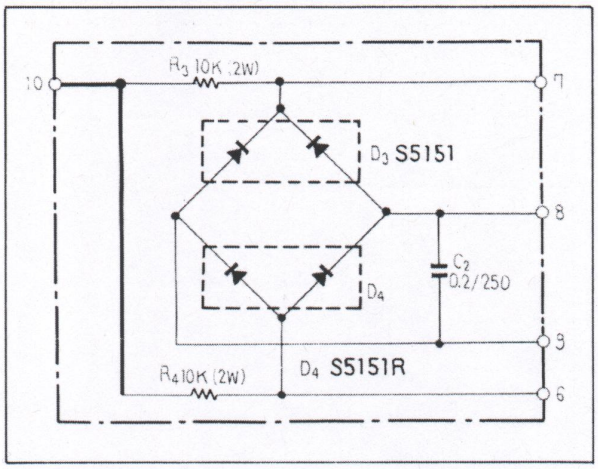

Parts List

CAPACITOR

Symbol	Part No.	Description		
C2	CQMA 204J 250	Mylar	0.2	250V

RESISTORS

Symbol	Part No.	Description		
R3	RS2P 103J	Metal oxide	10k	2W
R4	RS2P 103J	Metal oxide	10k	2W

SEMICONDUCTORS

Symbol	Part No.	Description
D3	S5151	Diode
D4	S5151R	Diode

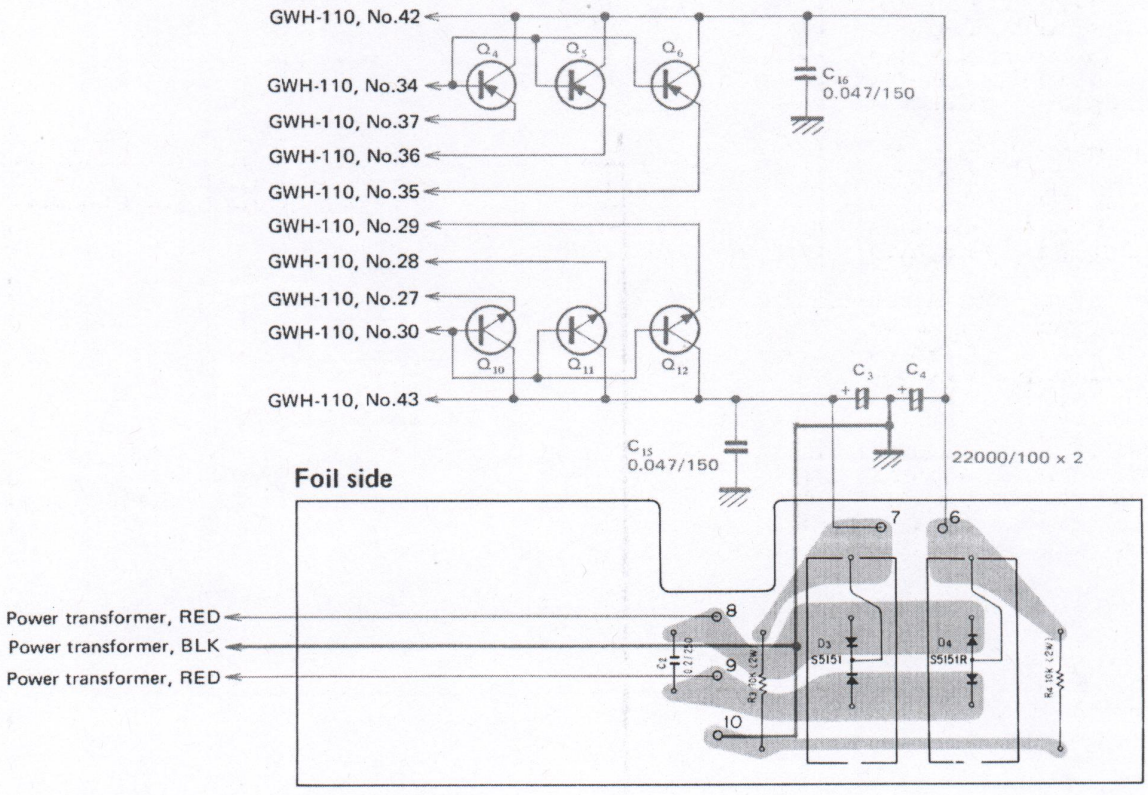

12.18 POWER SUPPLY ASSEMBLY (AWR-154)

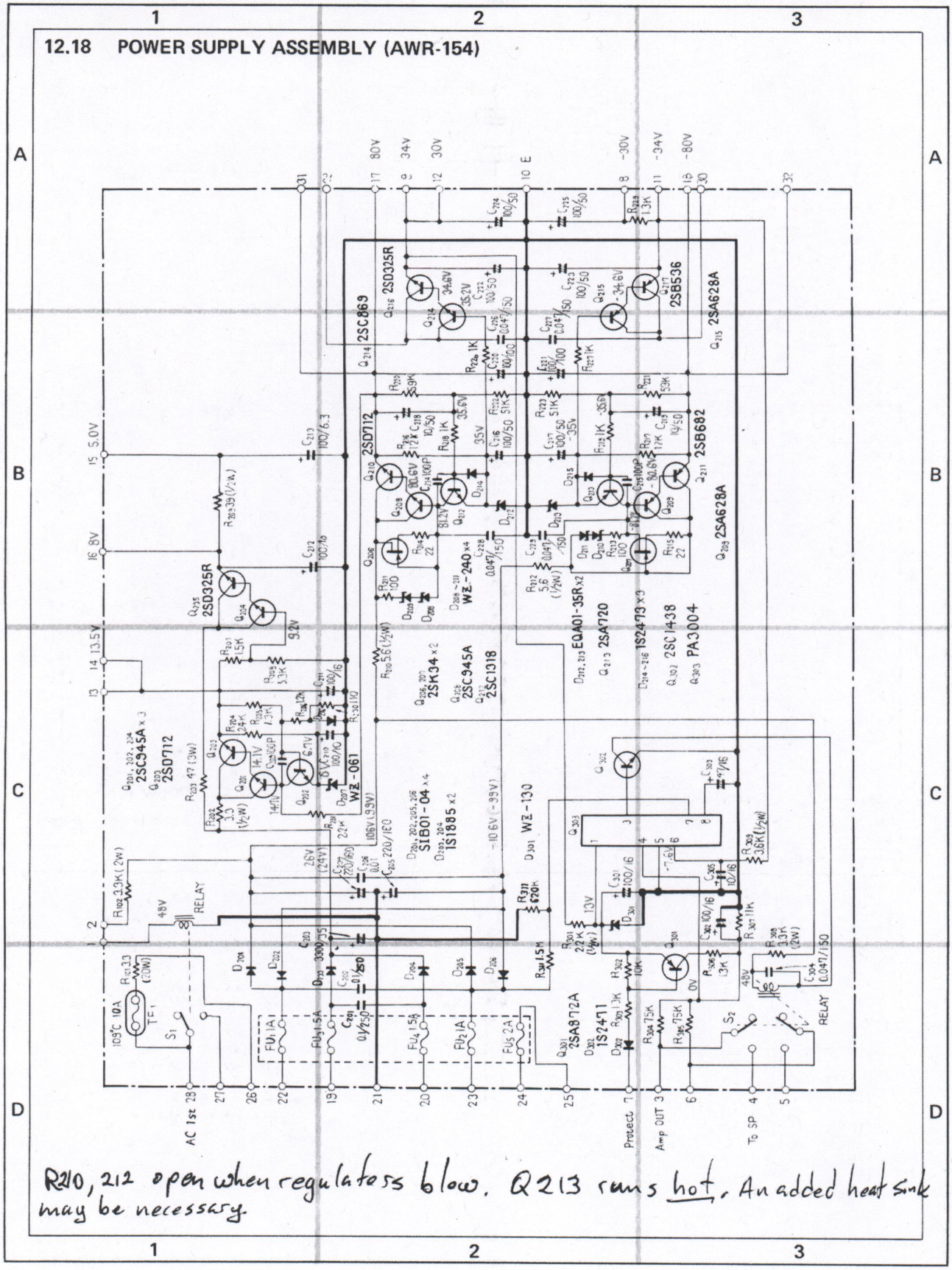

R210, 212 open when regulators blow. Q213 runs hot, An added heat sink may be necessary.

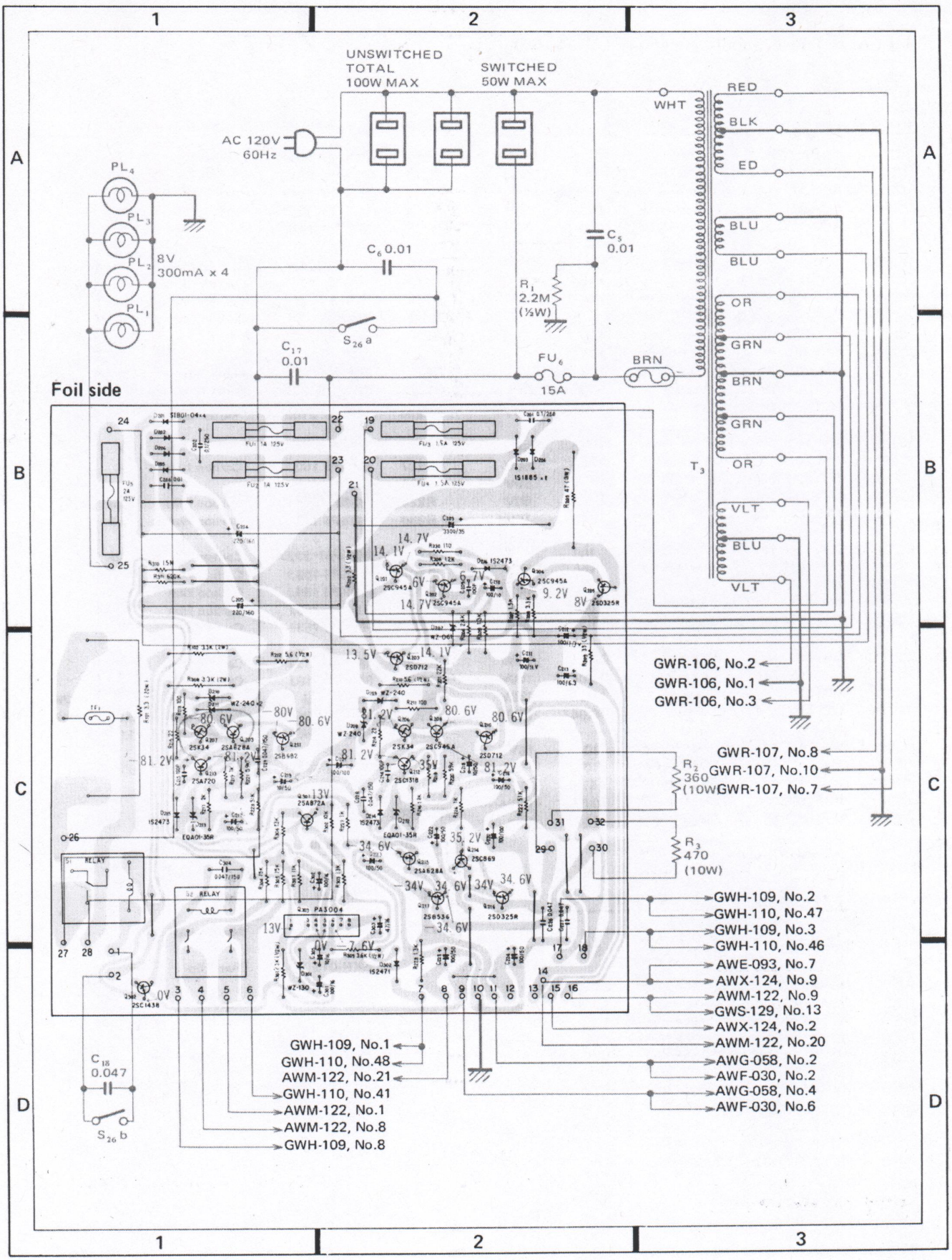
UNSWITCHED
TOTAL
100W MAX
SWITCHED
50W MAX
WHT
RED
BLK
ED
BLU
BLU
OR
GRN
BRN
GRN
OR
VLT
BLU
VLT
AC 120V
60Hz
PL4
PL3
PL2
PL1
8V
300mA x 4
C6 0.01
S26 a
C17
0.01
C5
0.01
R1
2.2M
(½W)
FU6
15A
BRN
T3
Foil side
GWR-106, No.2
GWR-106, No.1
GWR-106, No.3
GWR-107, No.8
GWR-107, No.10
GWR-107, No.7
R2
360
(10W)
R3
470
(10W)
GWH-109, No.2
GWH-110, No.47
GWH-109, No.3
GWH-110, No.46
AWE-093, No.7
AWX-124, No.9
AWM-122, No.9
GWS-129, No.13
AWX-124, No.2
AWM-122, No.20
AWG-058, No.2
AWF-030, No.2
AWG-058, No.4
AWF-030, No.6
GWH-109, No.1
GWH-110, No.48
AWM-122, No.21
GWH-110, No.41
AWM-122, No.1
AWM-122, No.8
GWH-109, No.8
C18
0.047
S26 b
RELAY
RELAY
1
2
3
A
B
C
D

Parts List of Power Supply Assembly (AWR-154)

CAPACITORS

Symbol	Part No.	Description		
C201	CQMA 104K 250	Mylar	0.1	250V
C202	CQMA 104K 250	Mylar	0.1	250V
C203	ACH-332	Electrolytic	3300	35V
C204	ACH-331	Electrolytic	220	160V
C205	ACH-331	Electrolytic	220	160V
C206	ACG-001	Ceramic	0.01	250V
C209	CCDSL 101K 50	Ceramic	100p	50V
C210	CEA 101P 10	Electrolytic	100	10V
C211	CEA 101P 16	Electrolytic	100	16V
C212	CEA 101P 10	Electrolytic	100	10V
C213	CEA 101P 6	Electrolytic	100	6V
C214	CCDSL 101K 50	Ceramic	100p	50V
C215	CCDSL 101K 50	Ceramic	100p	50V
C216	CEA 101P 50	Electrolytic	100	50V
C217	CEA 101P 50	Electrolytic	100	50V
C218	CEA 100P 50	Electrolytic	10	50V
C219	CEA 100P 50	Electrolytic	10	50V
C220	CEA 101P 100	Electrolytic	100	100V
C221	CEA 101P 100	Electrolytic	100	100V
C222	CEA 101P 50	Electrolytic	100	50V
C223	CEA 101P 50	Electrolytic	100	50V
C224	CEA 101P 50	Electrolytic	100	50V
C225	CEA 101P 50	Electrolytic	100	50V
C226	ACG-009	Ceramic	0.047	150V
C227	ACG-009	Ceramic	0.047	150V
C228	ACG-009	Ceramic	0.047	150V
C229	ACG-009	Ceramic	0.047	150V
C301	CEA 101P 16	Electrolytic	100	16V
C302	CEA 101P 16	Electrolytic	100	16V
C303	CEA 470P 16	Electrolytic	47	16V
C304	ACG-009	Ceramic	0.047	150V
C305	CEA 100P 16	Electrolytic	10	16V

RESISTORS

Symbol	Part No.	Description		
R101	ACN-019	Wire wound	3.3	20W
R102	RS2P 332J	Metal oxide	3.3k	2W
R201	RD¼PS 223J	Carbon film	22k	
R202	RD½PSF 3R3J	Carbon film	3.3	½W
R203	RS3P 470J	Metal oxide	47	3W
R204	RD¼PS 242J	Carbon film	2.4k	
R205	RD¼PS 132J	Carbon film	1.3k	
R206	RD¼PS 122J	Carbon film	1.2k	
R207	RD¼PS 152J	Carbon film	1.5k	
R208	RD¼PS 332J	Carbon film	3.3k	
R209	RD½PSF 390J	Carbon film	39	½W
R210	RD½PSF 5R6J	Carbon film	5.6	½W
R211	RD¼PSF 101J	Carbon film	100	
R212	RD½PSF 5R6J	Carbon film	5.6	½W
R213	RD¼PSF 101J	Carbon film	100	
R214	RD¼PSF 220J	Carbon film	22	
R215	RD¼PSF 220J	Carbon film	22	
R216	RD¼PS 123J	Carbon film	12k	
R217	RD¼PS 123J	Carbon film	12k	
R218	RD¼PS 102J	Carbon film	1k	
R219	RD¼PS 102J	Carbon film	1k	
R220	RN½PT 5902F	Metal film	59k	½W
R221	RN½PT 5902F	Metal film	59k	½W
R222	RN½PT 5102F	Metal film	51k	½W
R223	RN½PT 5102F	Metal film	51k	½W
R226	RD¼PS 102J	Carbon film	1k	
R227	RD¼PS 102J	Carbon film	1k	
R228				
R229	RD¼PS 132J	Carbon film	1.3k	
R230	RD¼PS 111J	Carbon film	110	
R301	RD½PSF 222J	Carbon film	2.2k	½W
R302	RD¼PS 103J	Carbon film	10k	
R303	RD¼PS 133J	Carbon film	13k	
R304	RD¼PS 753J	Carbon film	75k	
R305	RD¼PS 753J	Carbon film	75k	
R306	RD¼PS 132J	Carbon film	1.3k	
R307	RD¼PS 113J	Carbon film	11k	
R308	RS2P 332J	Metal oxide	3.3k	2W
R309	RD½PSF 362J	Carbon film	3.6k	½W
R310	RD¼PS 155J	Carbon film	1.5M	
R311	RD¼PS 624J	Carbon film	620k	

OTHERS

Symbol	Part No.	Description
S1	ASR-046	Relay (primary)
S2	ASR-048	Relay (protection)
TF	AEX-001	Microtemp
	AKR-013	Fuse clip
	ANH-340	Heat sink
	ANH-203	Heat sink
	ANH-425	Heat sink
	AKH-002	Transistor socket
	AEC-088	Insulator spacer

SEMICONDUCTORS

Symbol	Part No.	Descriprion
Q201	2SC945A-Q,RorS	Transistor
Q202	2SC945A-Q,RorS	Transistor
Q203	2SD712-C or D	Transistor
Q204	2SC945A-Q,RorS	Transistor
Q205	2SD325R-E or D	Transistor
Q206	2SK34-C or D	FET
Q207	2SK34-C or D	FET
Q208	2SC945A-Q,RorS	Transistor
Q209	2SA628A-C or D	Transistor
Q210	2SD712-C or D	Transistor
Q211	2SB682-C or D	Transistor
Q212	2SC1318-Q or R	Transistor
Q213	2SA720-Q or R	Transistor
Q214	2SC869-C or D	Transistor
Q215	2SA628A-C or D	Transistor
Q216	2SD325R-E or D	Transistor
Q217	2SB536-L or M	Transistor
Q301	2SA872A-E or D (2SA904-F)	Transistor
Q302	2SC1438-V or B	Transistor
Q303	PA3004	IC
D201	SIB 01-04	Diode
D202	SIB 01-04	Diode
D203	1S1885 (SIB 01-02)	Diode
D204	1S1885 (SIB 01-02)	Diode
D205	SIB 01-04	Diode
D206	SIB 01-04	Diode
D207	WZ-061	Zener diode
D208	WZ-240 (MZ-240)	Zener diode
D209	WZ-240 (MZ-240)	Zener diode
D210	WZ-240 (MZ-240)	Zener diode
D211	WZ-240 (MZ-240)	Zener diode
D212	EQA 01-35R	Zener diode
D213	EQA 01-35R	Zener diode
D214	1S2473	Diode
D215	1S2473	Diode
D216	1S2473	Diode
D301	WZ-130 (MZ-130)	Zener diode
D302	1S2471	Diode

List of Changed Parts for Factory Modification

Symbol	Part No.	Description

13. PACKING

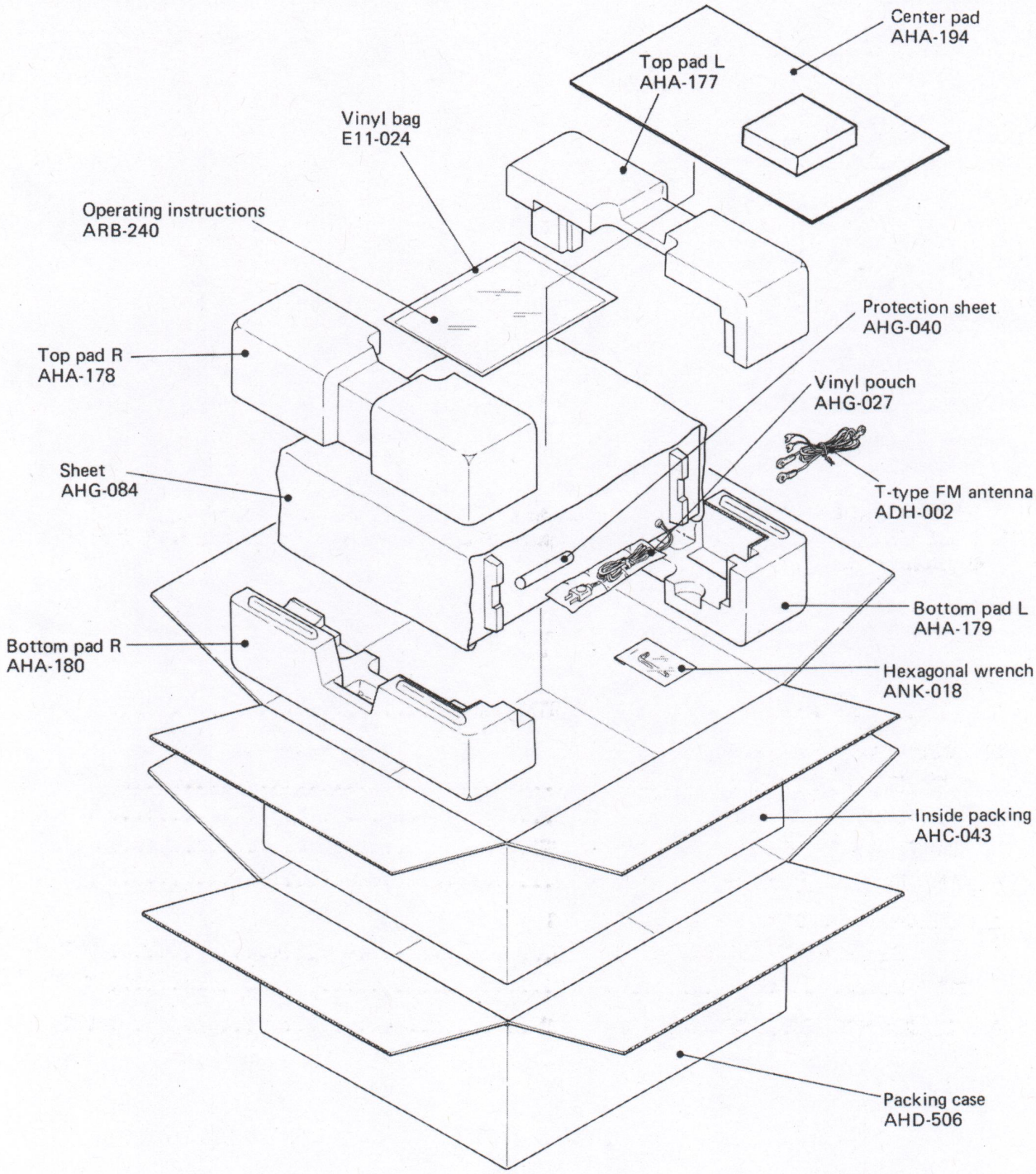
Center pad
AHA-194
Top pad L
AHA-177
Vinyl bag
E11-024
Operating instructions
ARB-240
Protection sheet
AHG-040
Top pad R
AHA-178
Vinyl pouch
AHG-027
T-type FM antenna
ADH-002
Sheet
AHG-084
Bottom pad L
AHA-179
Bottom pad R
AHA-180
Hexagonal wrench
ANK-018
Inside packing
AHC-043
Packing case
AHD-506

ADDITIONAL

Service Manual

PIONEER

AM/FM STEREO RECEIVER

SX-1980

HG
S
S/G

This additional service manual is applicable to HG, S and S/G types. For servicing of HG, S and S/G types please refer to KU type manual (pp. 1-104) with exception of descriptions in this manual.

CONTENTS

1. CONTRAST OF MISCELLANEOUS PARTS 106
2. SUPPLEMENTS FOR HG TYPE
   - 2.1 Exploded View of Rear Panel 108
   - 2.2 Schematic Diagram 109
   - 2.3 Meter Amplifier Assembly (AWM-126) 111
   - 2.4 Power Supply Assembly (AWR-155) 114
3. SUPPLEMENTS FOR S AND S/G TYPES
   - 3.1 Exploded View of Rear Panel 118
   - 3.2 Schematic Diagram 119
4. 5P CONNECTOR ASSEMBLY (AWX-062) 121

1. CONTRAST OF MISCELLANEOUS PARTS

FUSES

Symbol	Part No.				Description
	KU type	HG type	S type	S/G type	
FU1	AEK-106	AEK-402	AEK-106	AEK-106	Fuse 1A
FU2	AEK-106	AEK-402	AEK-106	AEK-106	Fuse 1A
FU3	AEK-104	. . . . . AEK-402	AEK-104	AEK-104	Fuse 1.5A Fuse 1A
FU4	AEK-104	. . . . . AEK-402	AEK-104	AEK-104	Fuse 1.5A Fuse 1A
FU5	AEK-103	. . . . . AEK-405	AEK-103	AEK-103	Fuse 2A Fuse 1.6A
FU6	AEK-303	. . . . AEK-404	AEK-112 AEK-110	AEK-112 AEK-110	Fuse 15A (for 110/120V) Fuse 8A (for 220/240V) Fuse 6.3A

SWITCHES

Symbol	Part No.				Description
	KU type	HG type	S type	S/G type	
S26	ASA-504	ASA-505	ASK-133	ASK-133	Lever switch (POWER)
S28	. . . .	. . . . . AKX-037	ASH-016	ASH-016	Slide switch (DE-EMPHASIS) Plug in selector (2-position)
S29	. . . . .	. . . . .	AKR-031	AKR-031	Plug in selector (4-position with fuse holder)

CAPACITORS

Symbol	Part No.				Description		
	KU type	HG type	S type	S/G type			
C5	ACG-003	. . . . . ACG-001	. . . . . ACG-001	. . . . . ACG-001	Ceramic Ceramic	0.01 0.01	125V 250V
C6	ACG-003	. . . .	. . . . . ACG-001	. . . . . ACG-001	Ceramic Ceramic	0.01 0.01	125V 250V
C17	ACG-003	. . . . .	. . . . .	. . . . .	Ceramic	0.01	125V
C18	ACG-009	. . . . .	. . . . .	. . . . .	Ceramic	0.047	150V

RESISTOR

Symbol	Part No.				Description		
	KU type	HG type	S type	S/G type			
R1	RD½PS 225J	. . . . .	. . . . .	. . . . .	Carbon film	2.2M	½W

TRANSFORMER

Symbol	Part No.				Description
	KU type	HG type	S type	S/G type	
T3	ATT-446	ATT-464	ATT-472	ATT-473	Power transformer

OTHERS

Symbol	Part No.				Description
	KU type	HG type	S type	S/G type	
	AWM-122	AWM-126	AWM-122	AWM-122	Meter amplifier assembly
	AWR-154	AWR-155	AWR-154	AWR-154	Power supply assembly
	.....	AWX-062	AWX-062	AWX-062	5P connector assembly
	AKA-004	AKA-005	AKA-004	AKA-004	Terminal (ANTENNA)
	AKR-032	K91-008	.....	.....	Fuse holder 1P
	AKP-005	.....	AKP-020	AKP-020	AC socket (AC OUTLETS)
	.....	AKP-008	.....	.....	Recessed plug (AC INLET)
	ADG-013	.....	ADG-015	ADG-015	AC power cord
	.....	AKC-030	.....	.....	Terminal strip 2P
	AEC-279	AEC-099	AEC-099	AEC-099	Capacitor cover
	ANH-365	ANH-424	ANH-365	ANH-365	Heat sink
	.....	ANE-191	.....	.....	Heat sink cover

PACKING

Symbol	Part No.				Description
	KU type	HG type	S type	S/G type	
	AHD-506	AHD-514	AHD-506	AHD-512	Packing case
	AHC-043	AHC-049	AHC-043	AHC-043	Inside packing
	AHG-027	.....	AHG-027	AHG-027	Vinyl pouch (for AC power cord)
	.....	.....	.....	AHB-091	Cardboard spacer

FURNISHED PARTS

Symbol	Part No.				Description
	KU type	HG type	S type	S/G type	
	ARB-240	ARB-242	ARB-241	ARB-241	Operating instructions (English)
	.....	ARD-112	.....	.....	Operating instructions (German/French)
	.....	.....	AEK-112	AEK-112	Fuse 15A
	.....	.....	AEK-110	AEK-110	Fuse 8A
	.....	.....	E11-033	E11-033	Vinyl pouch (for fuses)

2. SUPPLEMENTS FOR HG TYPE

2.1 EXPLODED VIEW OF REAR PANEL

NOTE:
Parts indicated in green type cannot be supplied.

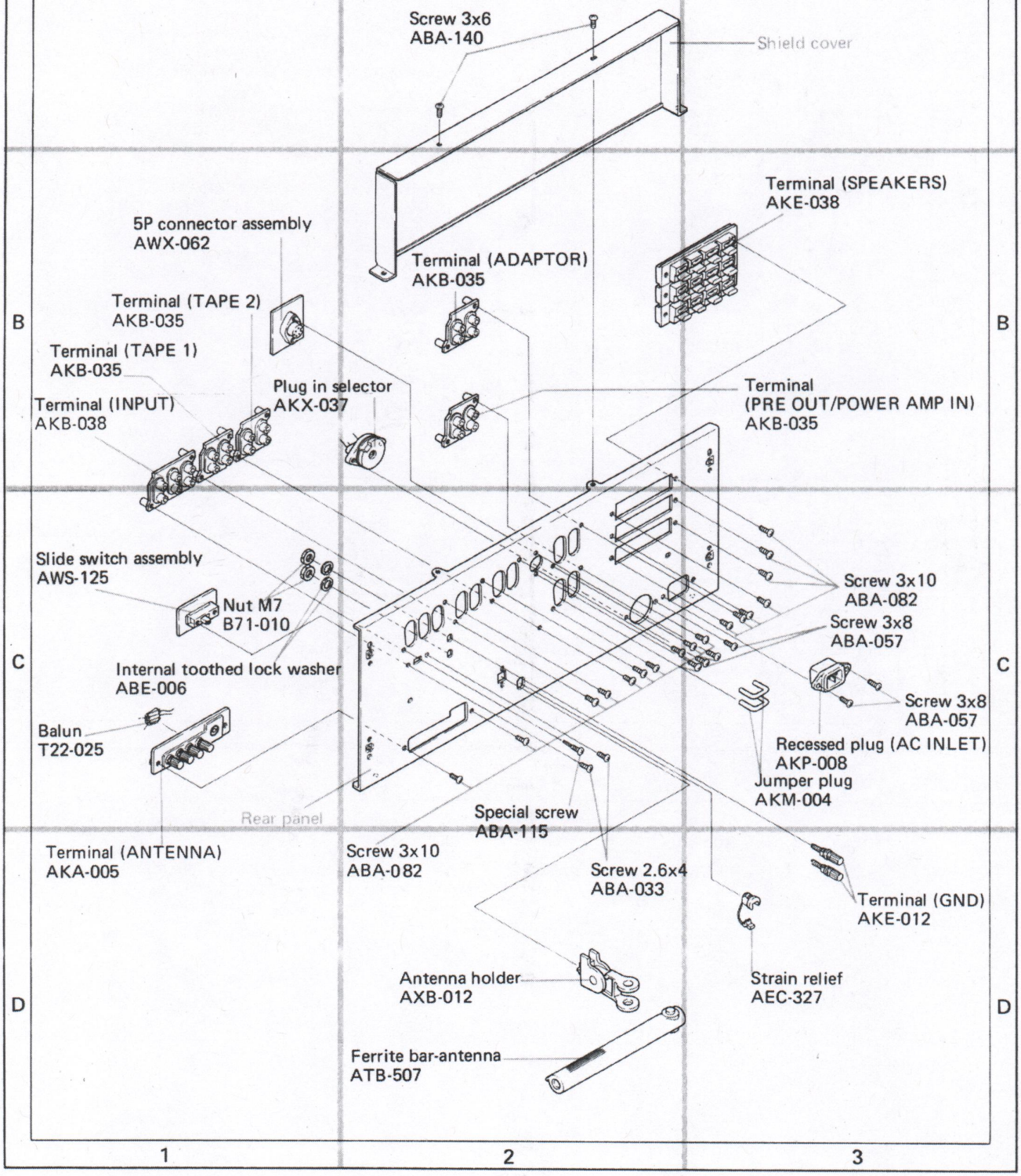

2.2 SCHEMATIC DIAGRAM (for HG)

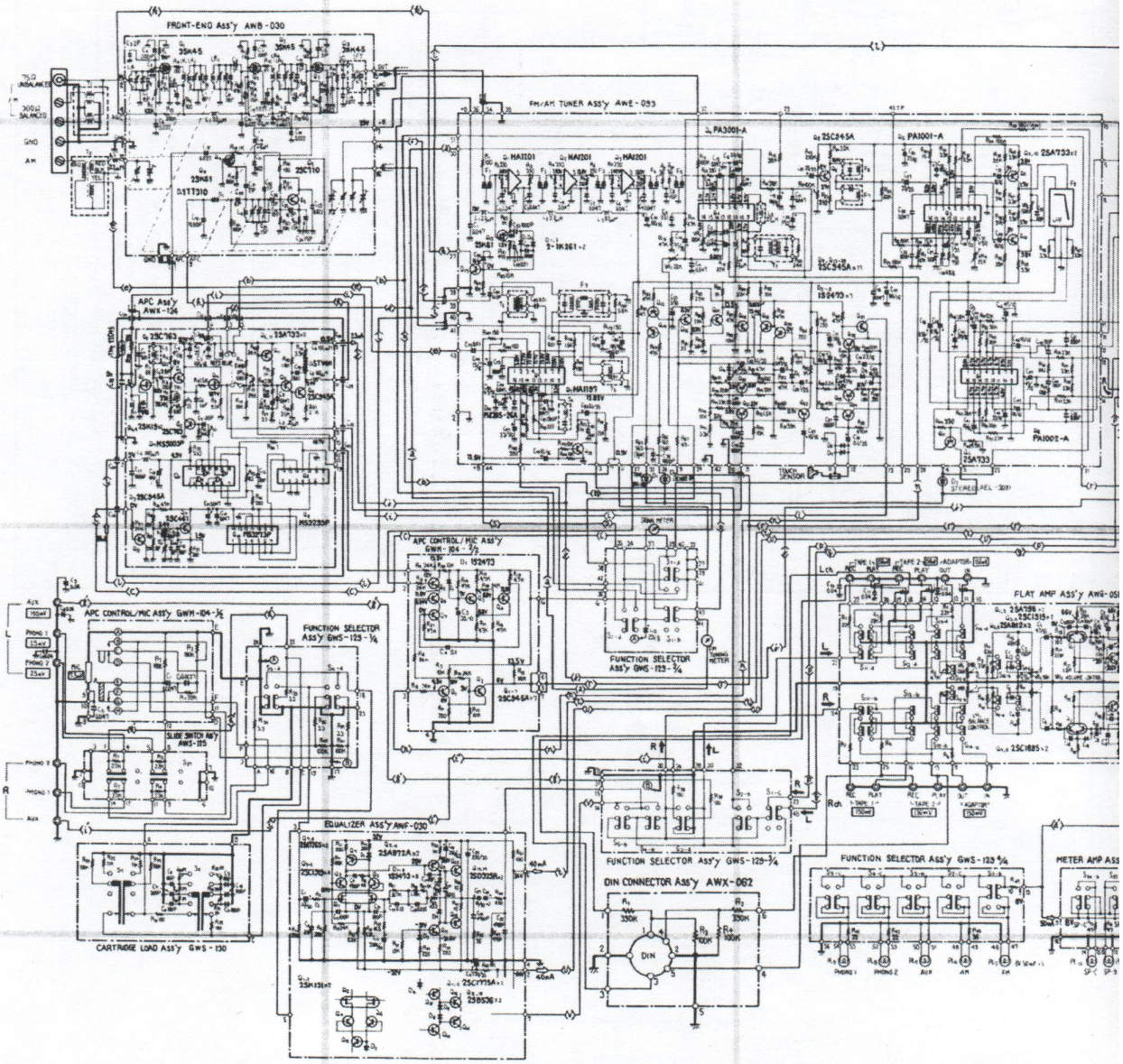

NOTE:
The indicated semiconductors are representative ones only. Other alternative semiconductors may be used and are listed in the parts lists.

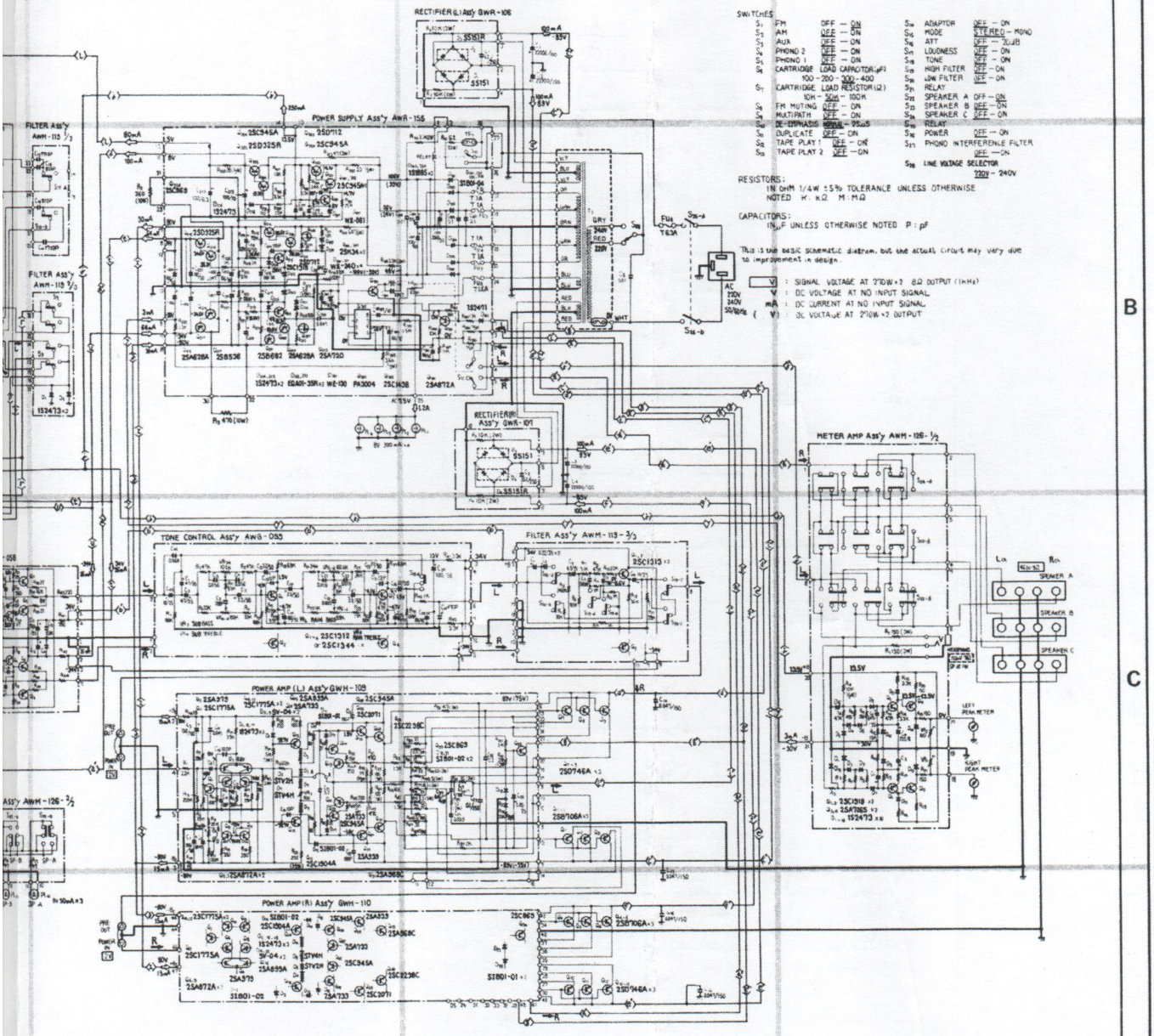

2.3 METER AMPLIFIER ASSEMBLY (AWM-126)

NOTE:
This assembly is applicable to the HG type.

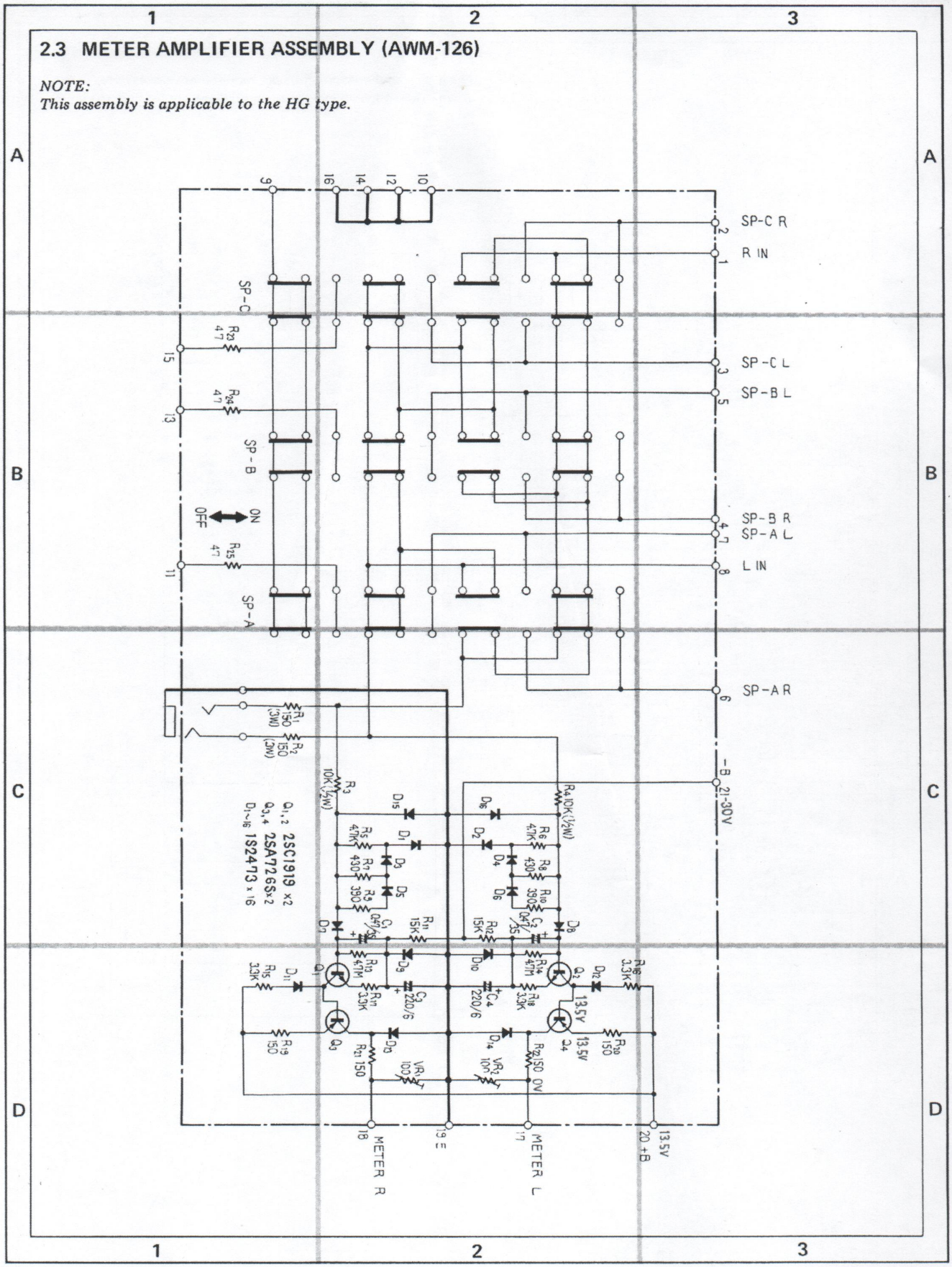

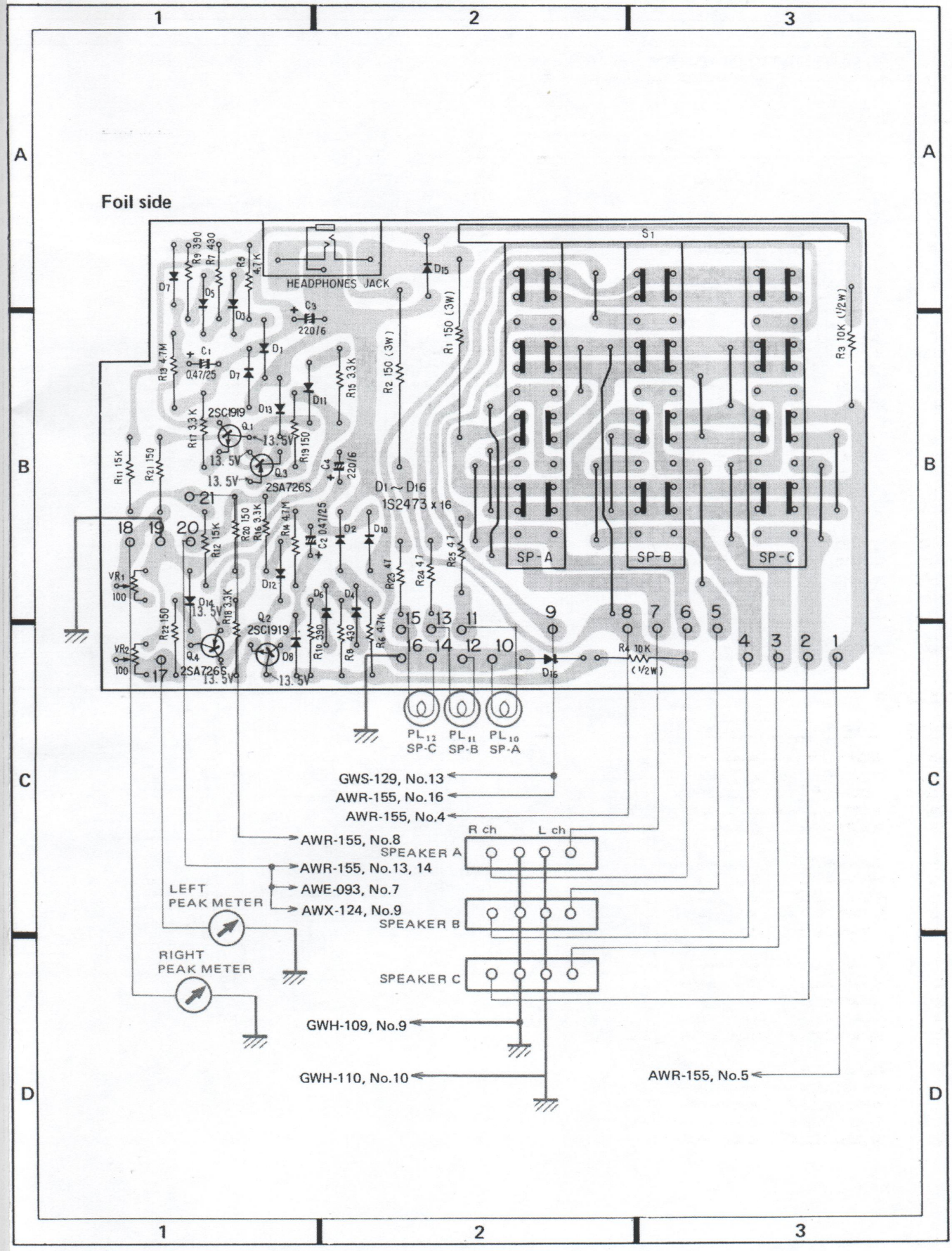
1
2
3
A
B
C
D
Foil side
S1
HEADPHONES JACK
SP-A
SP-B
SP-C
D1 ~ D16
1S2473 x 16
2SC1919
2SA726S
13.5V
PL12 SP-C
PL11 SP-B
PL10 SP-A
GWS-129, No.13
AWR-155, No.16
AWR-155, No.4
AWR-155, No.8
AWR-155, No.13, 14
AWE-093, No.7
AWX-124, No.9
GWH-109, No.9
GWH-110, No.10
AWR-155, No.5
R ch
L ch
SPEAKER A
SPEAKER B
SPEAKER C
LEFT PEAK METER
RIGHT PEAK METER

Parts List of Meter Amplifier Assembly (AWM-126)

SEMICONDUCTORS

Symbol	Part No.	Description
Q1	2SC1919-G or F (2SC1400-E or F)	Transistor
Q2	2SC1919-G or F (2SC1400-E or F)	Transistor
Q3	2SA726S-G or F (2SA750-E or F)	Transistor
Q4	2SA726S-G or F (2SA750-E or F)	Transistor
Q1	1S2473	Diode
Q2	1S2473	Diode
Q3	1S2473	Diode
Q4	1S2473	Diode
Q5	1S2473	Diode
Q6	1S2473	Diode
Q7	1S2473	Diode
Q8	1S2473	Diode
Q9	1S2473	Diode
Q10	1S2473	Diode
Q11	1S2473	Diode
Q12	1S2473	Diode
Q13	1S2473	Diode
Q14	1S2473	Diode
Q15	1S2473	Diode
Q16	1S2473	Diode

RESISTORS

Symbol	Part No.	Description		
R1	RS3P 151J	Metal oxide	150	3W
R2	RS3P 151J	Metal oxide	150	3W
R3	RD½PS 103J	Carbon film	10k	½W
R4	RD½PS 103J	Carbon film	10k	½W
R5	RD¼PS 472J	Carbon film	4.7k	
R6	RD¼PS 472J	Carbon film	4.7k	
R7	RD¼PS 431J	Carbon film	430	
R8	RD¼PS 431J	Carbon film	430	
R9	RD¼PS 391J	Carbon film	390	
R10	RD¼PS 391J	Carbon film	390	
R11	RD¼PS 153J	Carbon film	15k	
R12	RD¼PS 153J	Carbon film	15k	
R13	RD¼PS 475J	Carbon film	4.7M	
R14	RD¼PS 475J	Carbon film	4.7M	
R15	RD¼PS 332J	Carbon film	3.3k	
R16	RD¼PS 332J	Carbon film	3.3k	
R17	RD¼PS 332J	Carbon film	3.3k	
R18	RD¼PS 332J	Carbon film	3.3k	
R19	RD¼PSF 151J	Carbon film	150	
R20	RD¼PSF 151J	Carbon film	150	
R21	RD¼PSF 151J	Carbon film	150	
R22	RD¼PSF 151J	Carbon film	150	
R23	RD¼PS 470J	Carbon film	47	
R24	RD¼PS 470J	Carbon film	47	
R25	RD¼PS 470J	Carbon film	47	
VR1	ACP-019	Semi-fixed	(100-B)	
VR2	ACP-019	Semi-fixed	(100-B)	

CAPACITORS

Symbol	Part No.	Description		
C1	CSZA R47M 35	Electrolytic	0.47	35V
C2	CSZA R47M 35	Electrolytic	0.47	35V
C3	CEA 221P 6	Electrolytic	220	6V
C4	CEA 221P 6	Electrolytic	220	6V

SWITCH

Symbol	Part No.	Description
S22-24	ASG-131	Push switch (SPEAKERS)

OTHER

Symbol	Part No.	Description
	AKN-010	Phone Jack (PHONES)

2.4 POWER SUPPLY ASSEMBLY (AWR-155)

NOTE:
This assembly is applicable to the HG type.

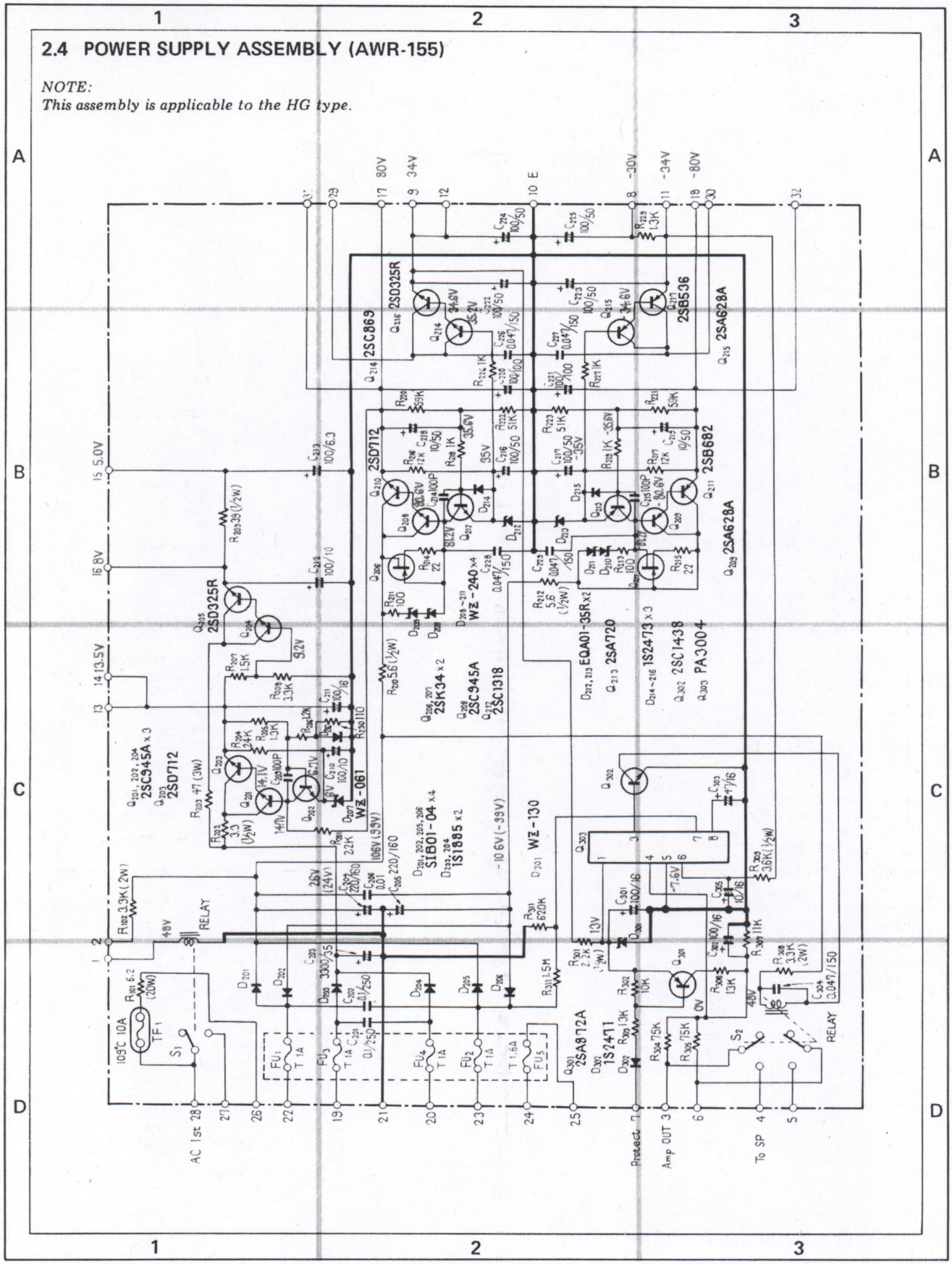

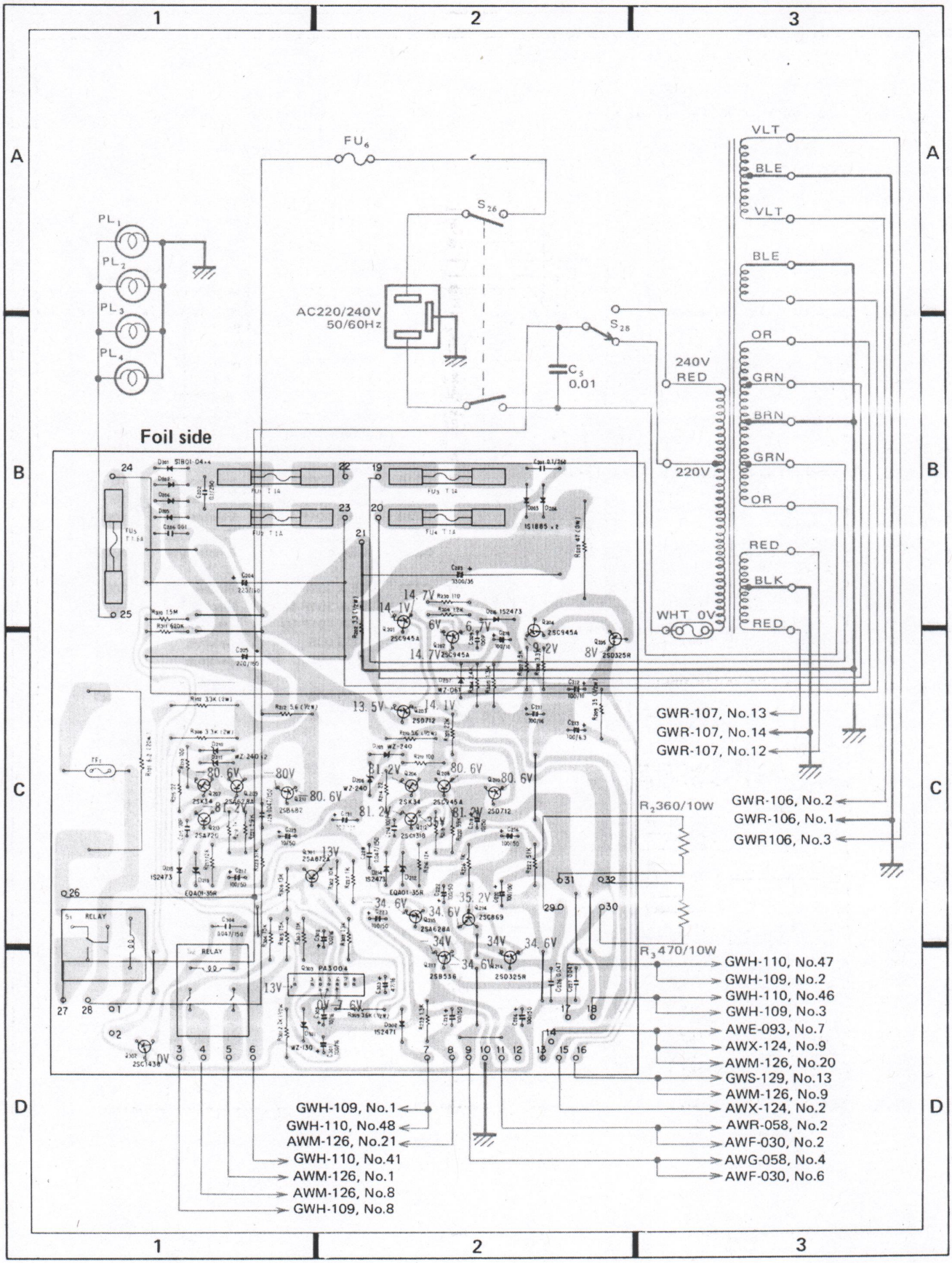
1
2
3
A
B
C
D
FU6
S26
PL1
PL2
PL3
PL4
AC220/240V
50/60Hz
C5
0.01
240V
RED
220V
WHT 0V
VLT
BLE
VLT
BLE
OR
GRN
BRN
GRN
OR
RED
BLK
RED
Foil side
GWR-107, No.13
GWR-107, No.14
GWR-107, No.12
GWR-106, No.2
GWR-106, No.1
GWR106, No.3
R2 360/10W
R3 470/10W
GWH-110, No.47
GWH-109, No.2
GWH-110, No.46
GWH-109, No.3
AWE-093, No.7
AWX-124, No.9
AWM-126, No.20
GWS-129, No.13
AWM-126, No.9
AWX-124, No.2
AWR-058, No.2
AWF-030, No.2
AWG-058, No.4
AWF-030, No.6
GWH-109, No.1
GWH-110, No.48
AWM-126, No.21
GWH-110, No.41
AWM-126, No.1
AWM-126, No.8
GWH-109, No.8

Parts List of Power Supply Assembly (AWR-155)

SEMICONDUCTORS

Symbol	Part No.	Description
Q201	2SC945A-Q,R or S	Transistor
Q202	2SC945A-Q,R or S	Transistor
Q203	2SD712-C or D	Transistor
Q204	2SC945A-Q,R or S	Transistor
Q205	2SD325R-E or D	Transistor
Q206	2SK34-C or D	FET
Q207	2SK34-C or D	FET
Q208	2SC945A-Q,R or S	Transistor
Q209	2SA628A-C or D	Transistor
Q210	2SD712-C or D	Transistor
Q211	2SB682-C or D	Transistor
Q212	2SC1318-Q or R	Transistor
Q213	2SA720-Q or R	Transistor
Q214	2SC869-C or D	Transistor
Q215	2SA628A-C or D	Transistor
Q216	2SD325R-E or D	Transistor
Q217	2SB536-L or M	Transistor
Q301	2SA872A-E or D (2SA904-F)	Transistor
Q302	2SC1438-V or B	Transistor
Q303	PA3004	IC
D201	SIB01-04	Diode
D202	SIB01-04	Diode
D203	1S1885 (SIB01-02)	Diode
D204	1S1885 (SIB01-02)	Diode
D205	SIB01-04	Diode
D206	SIB01-04	Diode
D207	WZ-061	Zener diode
D208	WZ-240 (MZ-240)	Zener diode
D209	WZ-240 (MZ-240)	Zener diode
D210	WZ-240 (MZ-240)	Zener diode
D211	WZ-240 (MZ-240)	Zener diode
D212	EQA01-35R	Zener diode
D213	EQA01-35R	Zener diode
D214	1S2473	Diode
D215	1S2473	Diode
D216	1S2473	Diode
D301	WZ-130 (MZ-130)	Zener diode
D302	1S2473	Diode

CAPACITORS

Symbol	Part No.	Description		
C201	CQMA 104K 250	Mylar	0.1	250V
C202	CQMA 104K 250	Mylar	0.1	250V
C203	ACH-332	Electrolytic	3300	35V
C204	ACH-331	Electrolytic	220	160V
C205	ACH-331	Electrolytic	220	160V
C206	ACG-001	Ceramic	0.01	250V
C209	CCDSL 101K 50	Ceramic	100p	50V
C210	CEA 101P 10	Electrolytic	100	10V
C211	CEA 101P 16	Electrolytic	100	16V
C212	CEA 101P 10	Electrolytic	100	10V
C213	CEA 101P 6	Electrolytic	100	6V
C214	CCDSL 101K 50	Ceramic	100p	50V
C215	CCDSL 101K 50	Ceramic	100p	50V
C216	CEA 101P 50	Electrolytic	100	50V
C217	CEA 101P 50	Electrolytic	100	50V
C218	CEA 100P 50	Electrolytic	10	50V
C219	CEA 100P 50	Electrolytic	10	50V
C220	CEA 101P 100	Electrolytic	100	100V
C221	CEA 101P 100	Electrolytic	100	100V
C222	CEA 101P 50	Electrolytic	100	50V
C223	CEA 101P 50	Electrolytic	100	50V
C224	CEA 101P 50	Electrolytic	100	50V
C225	CEA 101P 50	Electrolytic	100	50V
C226	ACG-009	Ceramic	0.047	150V
C227	ACG-009	Ceramic	0.047	150V
C228	ACG-009	Ceramic	0.047	150V
C229	ACG-009	Ceramic	0.047	150V
C301	CEA 101P 16	Electrolytic	100	16V
C302	CEA 101P 16	Electrolytic	100	16V
C303	CEA 470P 16	Electrolytic	47	16V
C304	ACG-009	Ceramic	0.047	150V
C305	CEA 100P 16	Electrolytic	10	16V

RESISTORS

Symbol	Part No.	Description		
R101	ACN-021	Wire wound	6.2	20W
R102	RS2P 332J	Metal oxide	3.3k	2W
R201	RD¼PS 223J	Carbon film	22k	
R202	RD½PSF 3R3J	Carbon film	3.3	½W
R203	RS3P 470J	Metal oxide	47	3W
R204	RD¼PS 242J	Carbon film	2.4k	
R205	RD¼PS 132J	Carbon film	1.3k	
R206	RD¼PS 122J	Carbon film	1.2k	
R207	RD¼PS 152J	Carbon film	1.5k	
R208	RD¼PS 332J	Carbon film	3.3k	
R209	RD½PSF 390J	Carbon film	39	½W
R210	RD½PS 5R6J	Carbon film	5.6	½W

Symbol	Part No.	Description		
R211	RD¼PSF 101J	Carbon film	100	
R212	RD½PSF 5R6J	Carbon film	5.6	½W
R213	RD¼PSF 101J	Carbon film	100	
R214	RD¼PSF 220J	Carbon film	22	
R215	RD¼PSF 220J	Carbon film	22	
R216	RD¼PS 123J	Carbon film	12k	
R217	RD¼PS 123J	Carbon film	12k	
R218	RD¼PS 102J	Carbon film	1k	
R219	RD¼PS 102J	Carbon film	1k	
R220	RN½PT 5902F	Metal film	59k	½W
R221	RN½PT 5902F	Metal film	59k	½W
R222	RN½PT 5102F	Metal film	51k	½W
R223	RN½PT 5102F	Metal film	51k	½W
R226	RD¼PS 102J	Carbon film	1k	
R227	RD¼PS 102J	Carbon film	1k	
R228				
R229	RD¼PS 132J	Carbon film	1.3k	
R230	RD¼PS 111J	Carbon film	110	
R301	RD½PSF 222J	Carbon film	2.2k	½W
R302	RD¼PS 103J	Carbon film	10k	
R303	RD¼PS 133J	Carbon film	13k	
R304	RD¼PS 753J	Carbon film	75k	
R305	RD¼PS 753J	Carbon film	75k	
R306	RD¼PS 132J	Carbon film	1.3k	
R307	RD¼PS 113J	Carbon film	11k	
R308	RS2P 332J	Metal oxide	3.3k	2W
R309	RD½PSF 362J	Carbon film	3.6k	½W
R310	RD¼PS 155J	Carbon film	1.5M	
R311	RD¼PS 624J	Carbon film	620k	

OTHERS

Symbol	Part No.	Description
S1	ASR-046	Relay (primary)
S2	ASR-048	Relay (protection)
TF	AEX-001	Microtemp
	AKR-010	Fuse clip
	ANH-340	Heat sink
	ANH-203	Heat sink
	ANH-425	Heat sink
	AKH-002	Transistor socket
	AEC-088	Insulator spacer

3. SUPPLEMENTS FOR S AND S/G TYPE

3.1 EXPLODED VIEW OF REAR PANEL

NOTE:
Parts indicated in green type cannot be supplied.

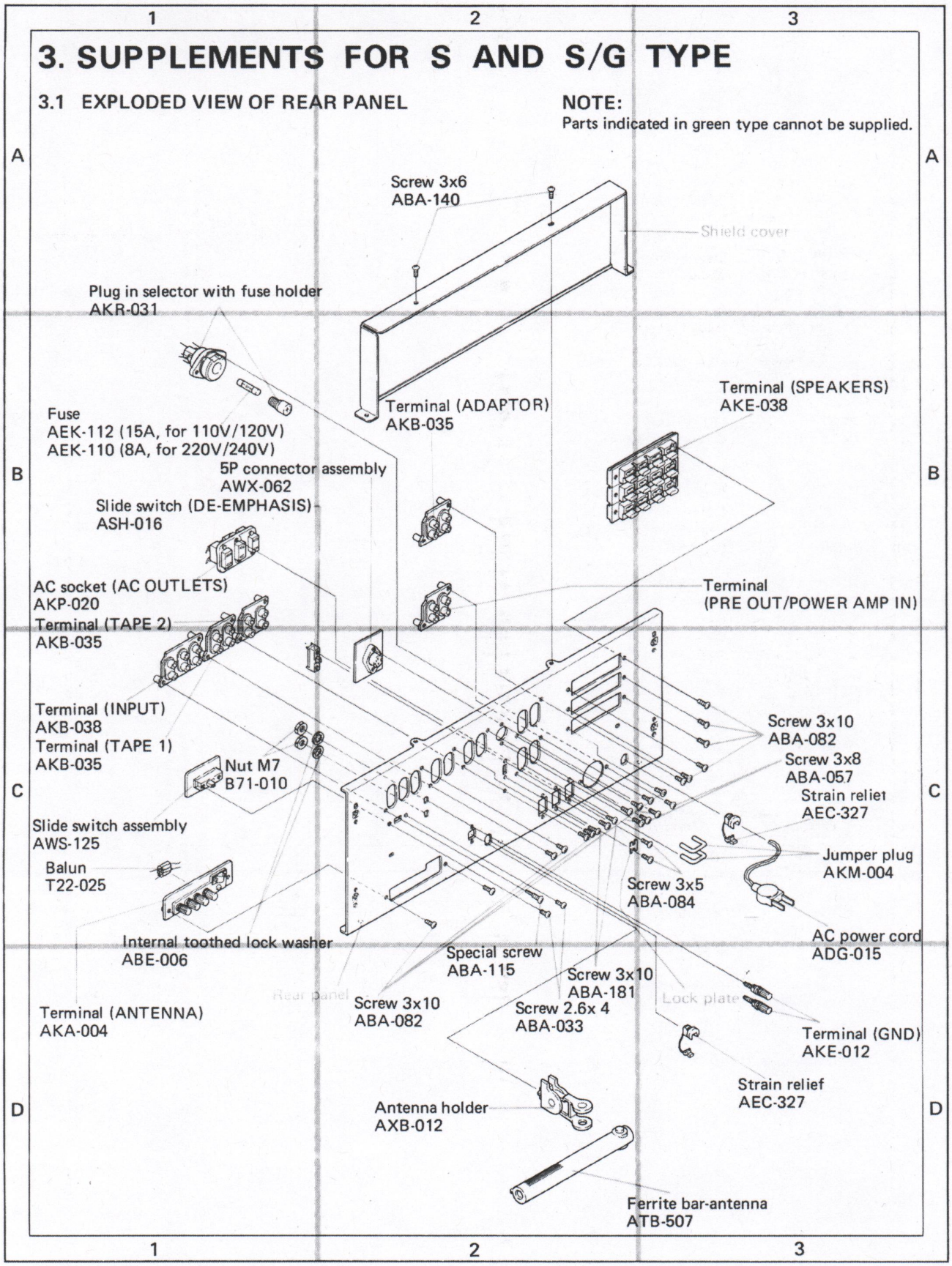

3.2 SCHEMATIC DIAGRAM (for S and S/G)

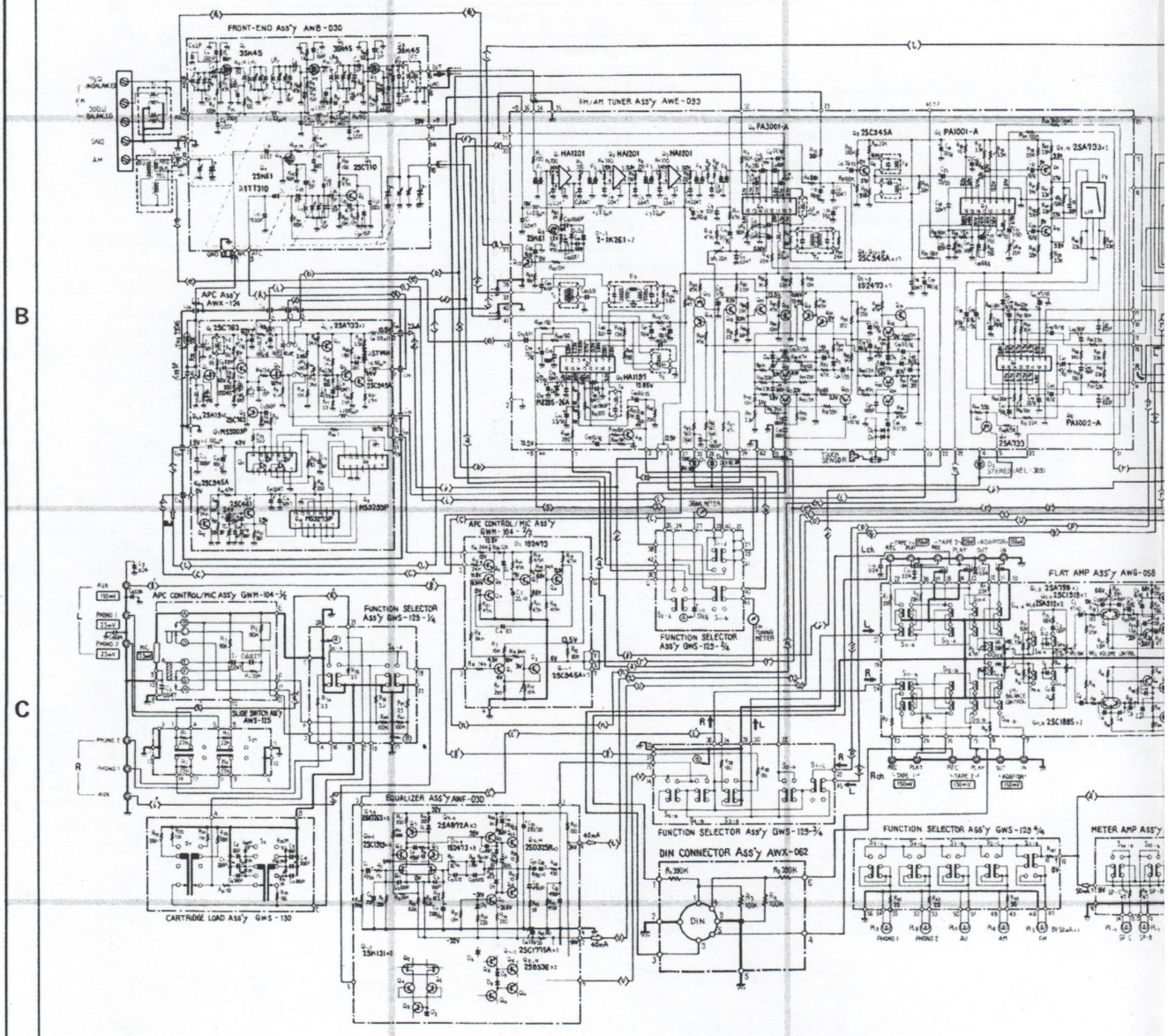

NOTE:
The indicated semiconductors are representative ones only. Other alternative semiconductors may be used and are listed in the parts lists.

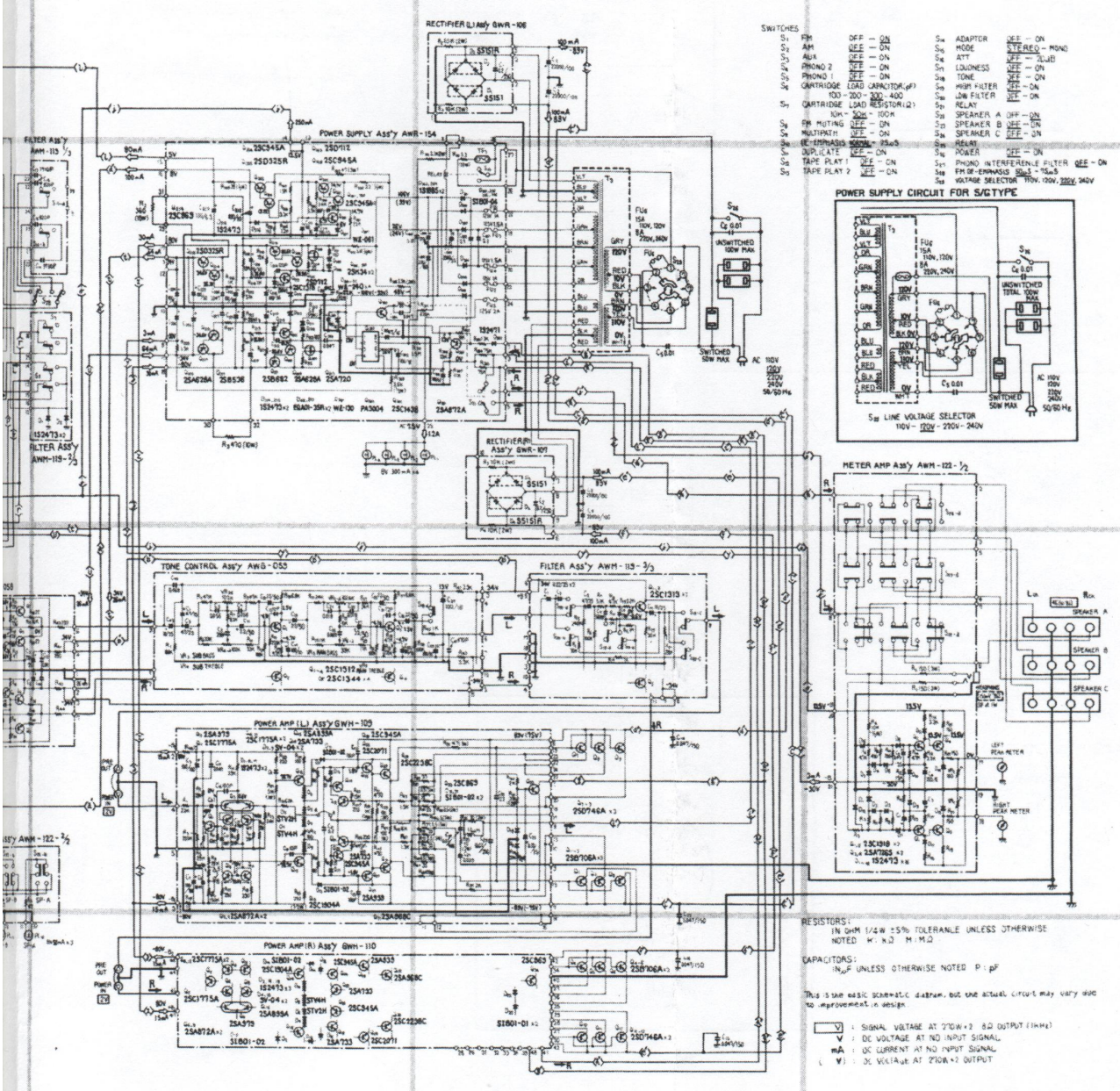

4. 5P CONNECTOR ASSEMBLY(AWX-062)

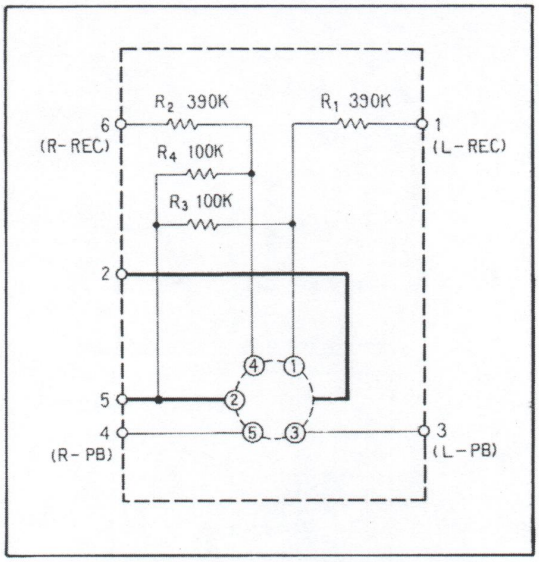

Parts List

Symbol	Part No.	Description
R1	RD¼PS 394J	Carbon film resistor 390k
R2	RD¼PS 394J	Carbon film resistor 390k
R3	RD¼PS 104J	Carbon film resistor 100k
R4	RD¼PS 104J	Carbon film resistor 100k
	AKP-011	Connector socket (REC/PLAY)

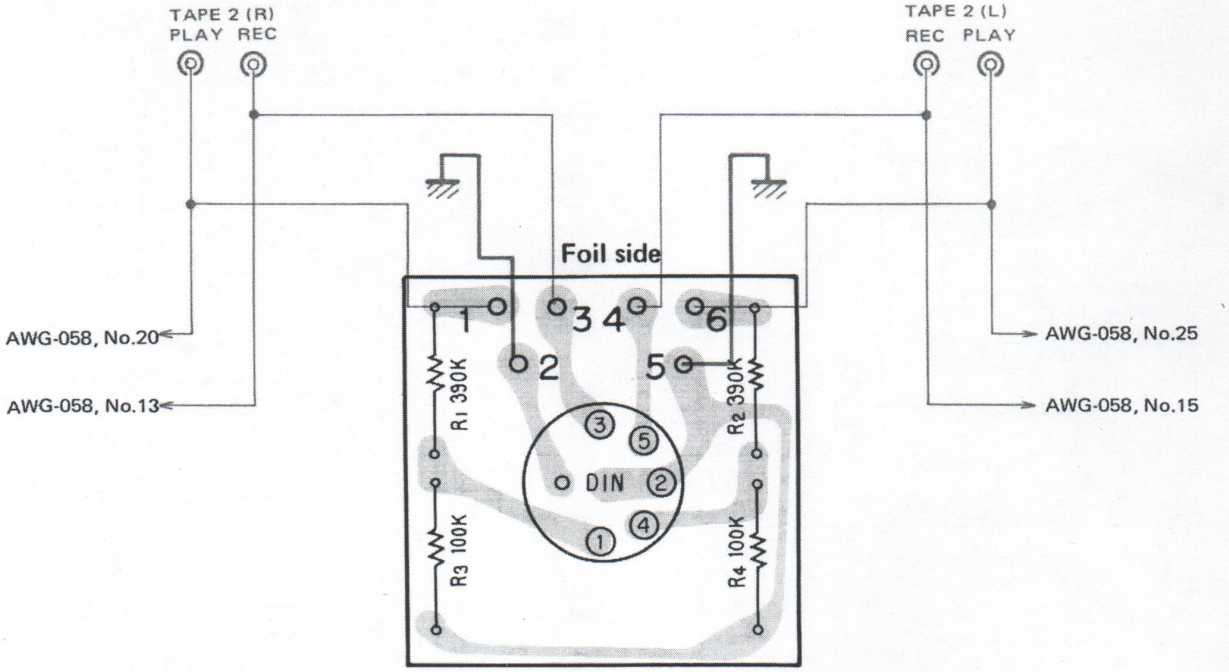

SUPPLEMENTS FOR MODEL SX-1980/KC

Model SX-1980/KC is the same as SX-1980/KU with exception of descriptions in this supplements.

Contrast of Miscellaneous Parts

Symbol	Description	Part No.		Remarks
		KU type	KC type	
T3	Power transformer	ATT-446	ATT-459	
C5	Ceramic capacitor 0.01 125V	ACG-003	ACG-014	
C6	Ceramic capacitor 0.01 125V	ACG-003	ACG-014	
C17	Ceramic capacitor 0.01 125V	ACG-003	ACG-014	
	Capacitor cover	AEC-279	AEC-365	for C5, C6, C17
	Packing case	AHD-506	AHD-527	

PIONEER®
U.S. PIONEER ELECTRONICS CORP.
85 OXFORD DRIVE, MOONACHIE, NEW JERSEY 07074 (201) 440-8100

NO.: SB-A1B-01

DATE: Feb. 17, 1981

SERVICE BULLETIN

MODEL: SX-1980

1) SUBJECT: Change of zener diodes in the power supply assembly.

SX-1980/KU, KC, S, S/G: AWR-154
" HG : AWR-155

REASON: To prevent zener diode damage during power switch activation.

D212, D213 : EQA01-35R ⟶ WZ-177 or MZ-177
D218, D219 : ADDED ⟶ WZ-177 or MZ-177

D208, D209, D210, D211 : WZ-240 ⟶ LZ-240

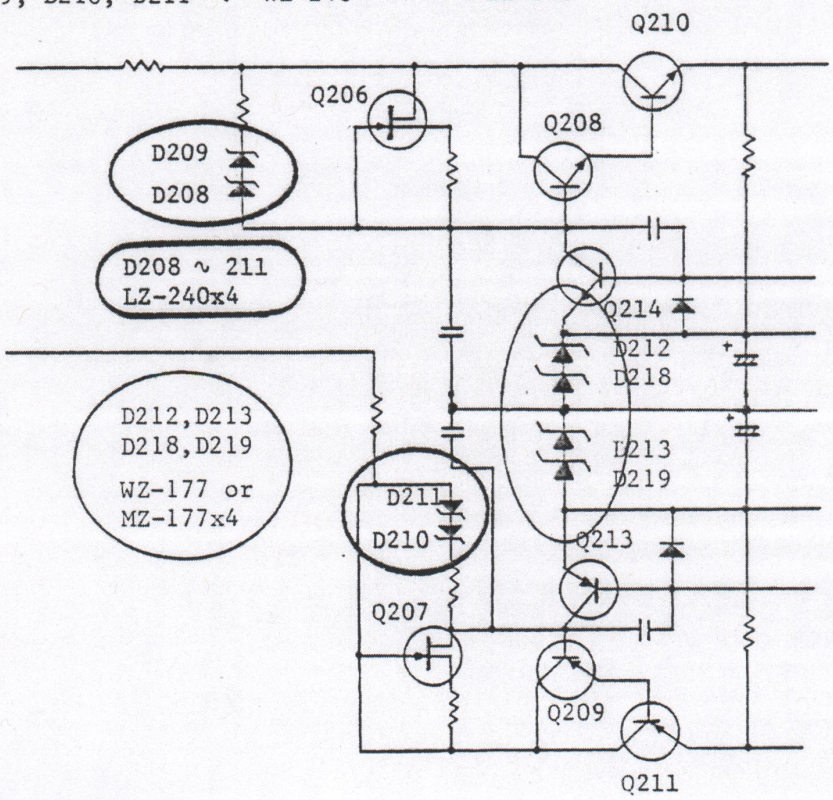

SERVICE MANUAL PAGE:
(ART-263) ---------- 100,114
APPLICABLE MONTH: September 1978

Please turn over

SUBJECT: Circuit modification of power supply assembly (AWR-154, 155)

REASON: Prevention of improper protection circuit operation when the AC input is low.

R308: 3.3 K ⟶ 3 K

RS2P332J ⟶ RS2P302J

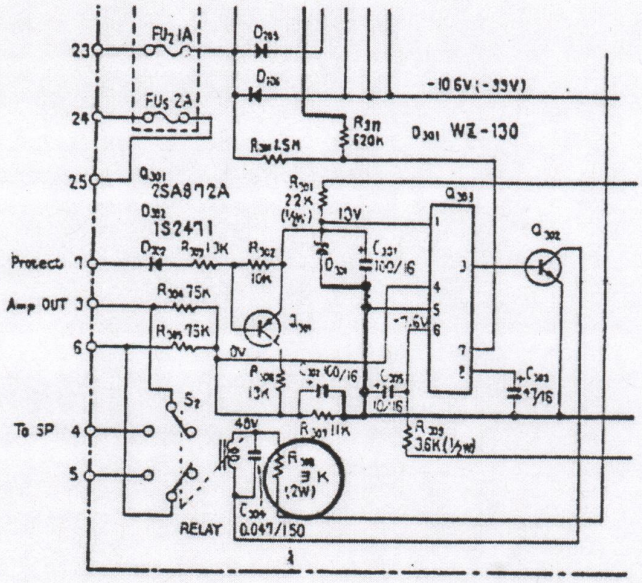

APPLICABLE SERIAL NO. AND MONTH:

SX-1980/KU	3606601
/S/G	2901051
/S	2600551
/KC	3400401
/HG	8400451

PIONEER ELECTRONIC CORPORATION
4-1, Meguro 1-Chome, Meguro-ku, Tokyo 153, Japan
U.S. PIONEER ELECTRONICS CORPORATION
85 Oxford Drive, Moonachie, New Jersey 07074, U.S.A.
PIONEER ELECTRONIC (EUROPE) N.V.
Luithagen-Haven9, 2030 Antwerp, Belgium
PIONEER ELECTRONICS AUSTRALIA PTY. LTD.
178-184 Boundary Road, Braeside, Victoria 3195, Australia

©NOV. 1977

Printed in Japan
<ART-263-0>

<77K03Y1H01>